DC 80x80x25mm - E

General Specifications

Material:……..Frame:Plastic(UL94V0)
Impeller: ……Impeller:Plastic(UL94V0)
Expected Life: ……..FDB Bearing 60,000hrs (40℃)
Ball Bearing 50,000hrs (40℃)
Long Life Bearing 25,000hrs (40℃)
Lead Wire: ……+red -black or yellow Signal,blue Speed control
Temperature Range: ……..Operating temperature -10℃～70℃(Humiditumidity 35%~85%RH)
Storagetemperature -30℃～70℃(Humiditumidity 35%~85%RH)
Signal output: ……..FG Signal /RD Signal
Speed control mode: ……..PWM Control

Dimensions

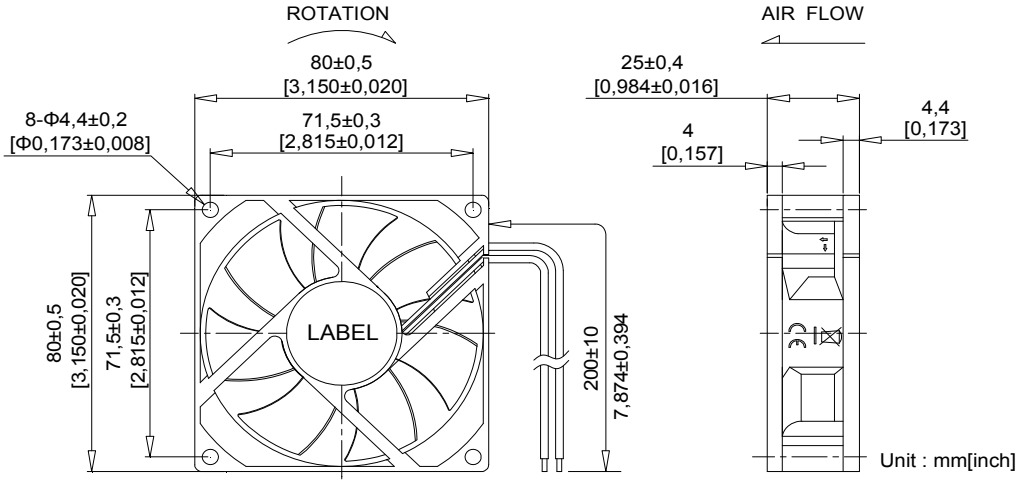

Air Flow - Static Pressure Characteristics

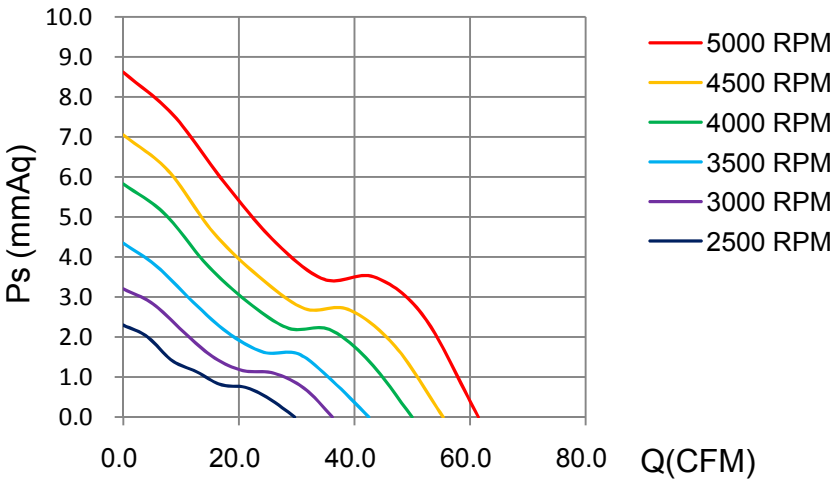

MODEL	Rated Voltage (V)	Operating Voltage Range (V)	Rated Current (Amp)	Rated Input Power (W)	Rated Speed (rpm)	Air Flow		Static Pressure		Sound level
						(CFM)	m^3/min	(mmH2O)	inch-H2O	dB(A)
CD8025E12X	12	7~13.8	0.17	2.04	2500	29.65	0.830	2.30	0.091	37.6
CD8025L12X		7~13.8	0.22	2.64	3000	36.19	1.013	3.20	0.126	38.5
CD8025M12X		7~13.8	0.29	3.48	4000	49.98	1.399	5.83	0.230	44.0
CD8025H12X		7~13.8	0.35	4.20	5000	61.47	1.721	8.62	0.339	48.4
CD8025E24X	24	12~25.6	0.15	3.60	3000	36.19	1.013	3.20	0.126	38.5
CD8025L24X		12~25.6	0.19	4.56	4000	49.98	1.399	5.83	0.230	44.0
CD8025M24X		12~25.6	0.22	5.28	4500	55.39	1.551	7.05	0.278	46.3
CD8025H24X		12~25.6	0.25	6.00	5000	61.47	1.721	8.62	0.339	48.4

Specifications are subject to change without notice