DC 172x152x51mm - C

General Specifications

Material:……Frame:Aluminium
Impeller: ……Impeller:Plastic(UL94V0)
Expected Life: ……Ball Bearing 50,000hrs (40℃)
Lead Wire: ……+red -black or yellow Signal,blue Speed control
Temperature Range: ……Operating temperature -10℃～70℃(Humiditumidity 35%~85%RH)
Storagetemperature -30℃～70℃(Humiditumidity 35%~85%RH)
Signal output: ……FG Signal /RD Signal
Speed control mode: ……PWM Control

Dimensions

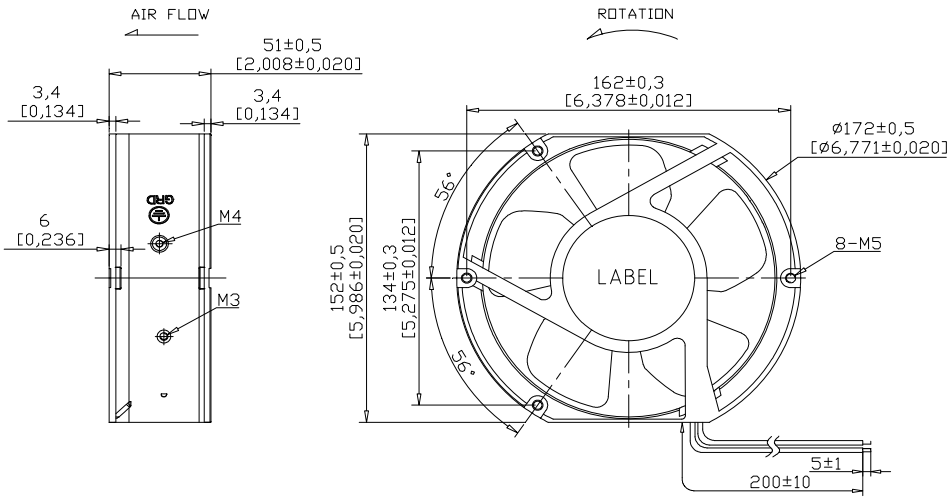

Air Flow - Static Pressure Characteristics

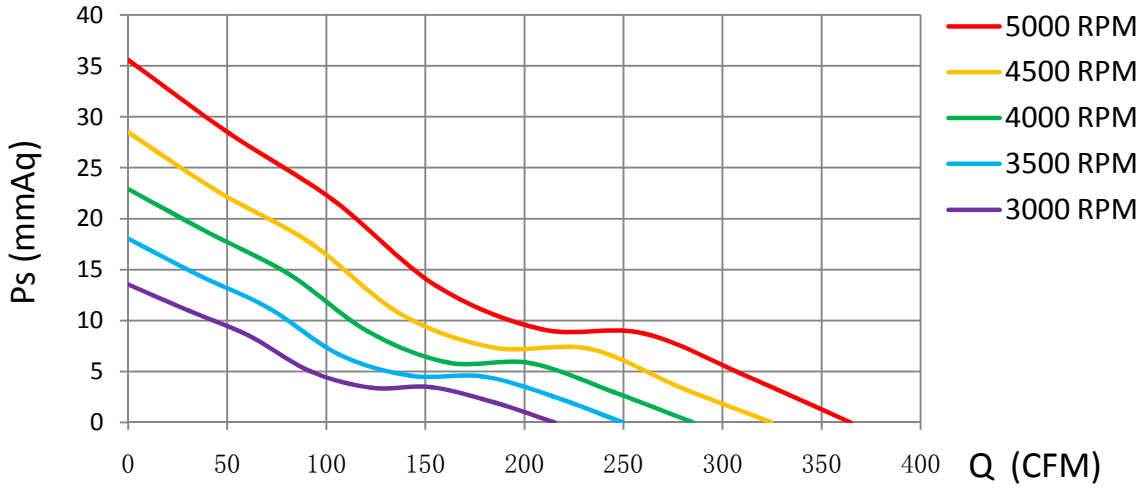

MODEL	Rated Voltage (V)	Operating Voltage Range (V)	Rated Current (Amp)	Rated Input Power (W)	Rated Speed (rpm)	Air Flow		Static Pressure		Sound level dB(A)
						(CFM)	m^3/min	(mmH2O)	inch-H2O	
CD17251L12X	12	7~13.8	1.50	2.25	3000	215.10	6.087	13.55	0.533	55.3
CD17251M12X		7~13.8	1.90	22.80	3500	249.62	7.063	18.03	0.710	58.6
CD17251H12X		7~13.8	2.90	34.80	4000	285.05	8.066	22.90	0.902	62.8
CD17251L24X	24	12~25.6	0.90	21.60	3500	249.62	7.063	18.03	0.710	58.6
CD17251M24X		12~25.6	1.50	36.00	4000	285.05	8.066	22.90	0.902	62.8
CD17251H24X		12~25.6	2.60	62.40	4500	324.65	9.186	28.47	1.121	65.9
CD17251X24X		12~25.6	3.50	84.00	5000	364.53	10.315	35.58	1.401	68.5
CD17251L48X	48	36~54	0.50	24.00	3500	249.62	7.063	18.03	0.710	58.6
CD17251M48X		36~54	0.90	43.20	4000	285.05	8.066	22.90	0.902	62.8
CD17251H48X		36~54	1.50	72.00	4500	324.65	9.186	28.47	1.121	65.9
CD17251X48X		36~54	1.80	86.40	5000	364.53	10.315	35.58	1.401	68.5

Specifications are subject to change without notice

NIKCOOL

DONGGUAN YIJIN ELECTRONIC CO.,LTD