DC 172x152x51mm - B

General Specifications

Material:……Frame:Aluminium
Impeller: ……..Impeller:Plastic(UL94V0)
Expected Life: ……Ball Bearing 50,000hrs (40℃)
Lead Wire: ……..+red -black or yellow Signal,blue Speed control
Temperature Range: ……..Operating temperature -10℃～70℃(Humiditumidity 35%~85%RH)
Storagetemperature -30℃～70℃(Humiditumidity 35%~85%RH)
Signal output: ……..FG Signal /RD Signal
Speed control mode: ……PWM Control

Dimensions

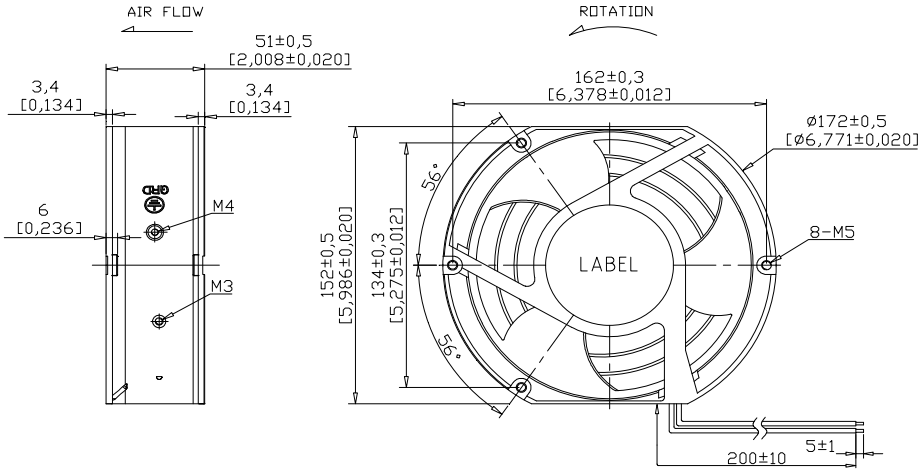

Air Flow - Static Pressure Characteristics

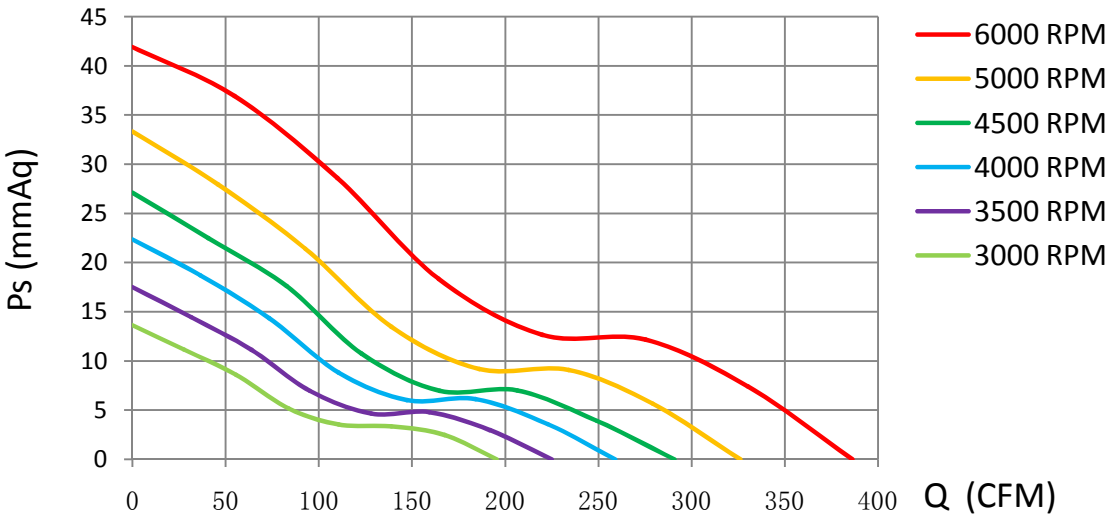

MODEL	Rated Voltage (V)	Operating Voltage Range (V)	Rated Current (Amp)	Rated Input Power (W)	Rated Speed (rpm)	Air Flow		Static Pressure		Sound level dB(A)
						(CFM)	m^3/min	(mmH2O)	inch-H2O	
CD17251E12X	12	7~13.8	1.00	12.00	3000	195.35	5.529	13.64	0.537	56.0
CD17251L12X		7~13.8	1.60	19.20	3500	225.04	6.368	17.50	0.689	60.3
CD17251M12X		7~13.8	2.20	26.40	4000	259.09	7.331	22.35	0.880	63.6
CD17251H12X		7~13.8	3.00	36.00	4500	290.80	8.229	27.09	1.067	66.5
CD17251L24X	24	12~25.6	0.90	21.60	3500	225.04	6.368	17.50	0.689	60.3
CD17251M24X		12~25.6	1.50	36.00	4000	259.09	7.331	22.35	0.880	63.6
CD17251H24X		12~25.6	2.40	57.60	5000	326.16	9.229	33.31	1.311	69.3
CD17251X24X		12~25.6	3.50	84.00	6000	386.35	10.928	41.90	1.650	74.2
CD17251L48X	48	36~54	0.50	24.00	3500	225.04	6.368	17.50	0.689	60.3
CD17251M48X		36~54	0.80	38.40	4000	259.09	7.331	22.35	0.880	63.6
CD17251H48X		36~54	1.30	62.40	5000	326.16	9.229	33.31	1.311	69.3
CD17251X48X		36~54	1.80	86.40	6000	386.35	10.928	41.90	1.650	74.2

Specifications are subject to change without notice

NIKCOOL

DONGGUAN YIJIN ELECTRONIC CO.,LTD