DC 172x152x51mm - A

General Specifications

Material:……Frame:Aluminium
Impeller: ……Impeller:Plastic(UL94V0)
Expected Life: ……Ball Bearing 50,000hrs (40℃)
Lead Wire: ……+red -black or yellow Signal,blue Speed control
Temperature Range: ……Operating temperature -10℃～70℃(Humiditumidity 35%~85%RH)
Storagetemperature -30℃～70℃(Humiditumidity 35%~85%RH)
Signal output: ……FG Signal /RD Signal
Speed control mode: ……PWM Control

Dimensions

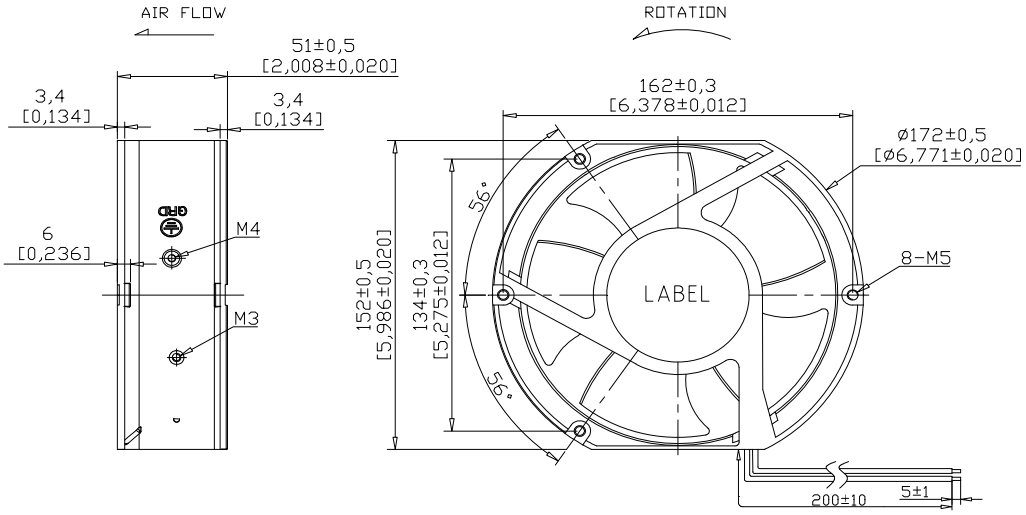

Air Flow - Static Pressure Characteristics

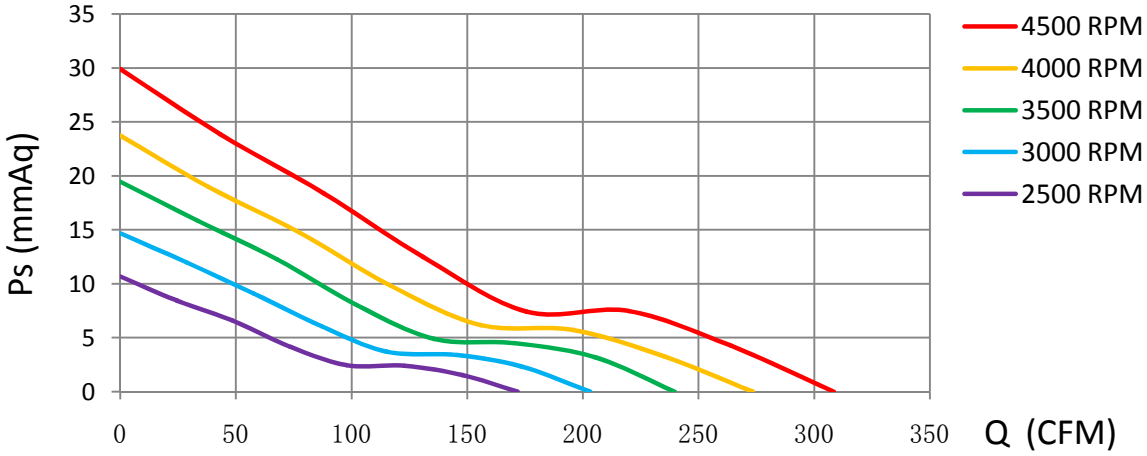

MODEL	Rated Voltage (V)	Operating Voltage Range (V)	Rated Current (Amp)	Rated Input Power (W)	Rated Speed (rpm)	Air Flow		Static Pressure		Sound level
						(CFM)	m^3/min	(mmH2O)	inch-H2O	dB(A)
CD17251E12X	12	7~13.8	1.00	12.00	2500	171.83	4.862	10.68	0.420	52.5
CD17251L12X		7~13.8	1.50	18.00	3000	203.20	5.750	14.68	0.578	57.1
CD17251M12X		7~13.8	1.90	22.80	3500	239.70	6.783	19.48	0.767	61.3
CD17251H12X		7~13.8	2.90	34.80	4000	273.52	7.740	23.73	0.934	64.6
CD17251L24X	24	12~25.6	0.70	16.80	3000	203.20	5.750	14.68	0.578	57.1
CD17251M24X		12~25.6	1.00	24.00	3500	239.70	6.783	19.48	0.767	61.3
CD17251H24X		12~25.6	1.50	36.00	4000	273.52	7.740	23.73	0.934	64.6
CD17251X24X		12~25.6	2.00	48.00	4500	308.50	8.729	29.91	1.178	68.5
CD17251L48X	48	36~54	0.35	16.80	3000	203.20	5.750	14.68	0.578	57.1
CD17251M48X		36~54	0.50	24.00	3500	239.70	6.783	19.48	0.767	61.3
CD17251H48X		36~54	0.70	33.60	4000	273.52	7.740	23.73	0.934	64.6
CD17251X48X		36~54	1.00	48.00	4500	308.50	8.729	29.91	1.178	68.5

Specifications are subject to change without notice

NIKCOOL

DONGGUAN YIJIN ELECTRONIC CO.,LTD