DC 120x120x25mm - D

General Specifications

Material:……Frame:Plastic(UL94V0)
Impeller: ……..Impeller:Plastic(UL94V0)
Expected Life: ……FDB Bearing 60,000hrs (40℃)
Ball Bearing 50,000hrs (40℃)
Long Life Bearing 25,000hrs (40℃)
Lead Wire: ……..+red -black or yellow Signal,blue Speed control
Temperature Range: ……..Operating temperature -10℃～70℃(Humiditumidity 35%~85%RH)
Storagetemperature -30℃～70℃(Humiditumidity 35%~85%RH)
Signal output: ……..FG Signal /RD Signal
Speed control mode: ……PWM Control

Dimensions

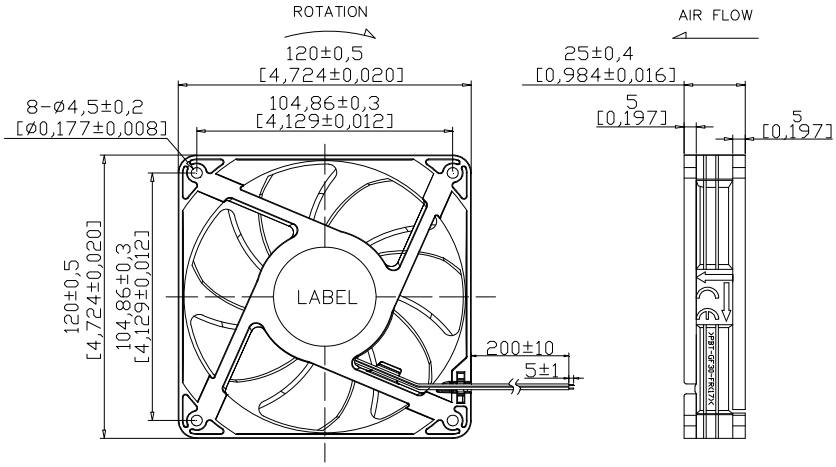

Air Flow - Static Pressure Characteristics

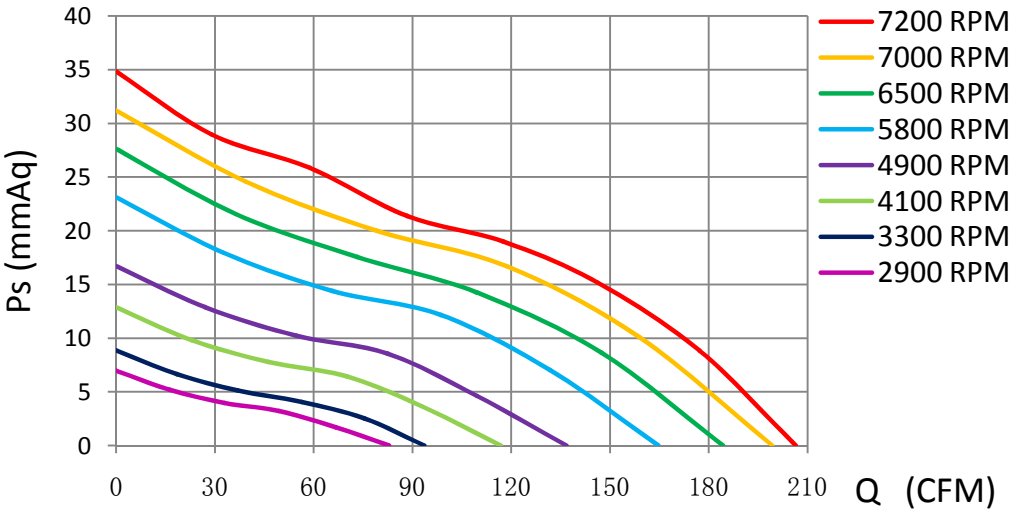

MODEL	Rated Voltage (V)	Operating Voltage Range (V)	Rated Current (Amp)	Rated Input Power (W)	Rated Speed (rpm)	Air Flow		Static Pressure		Sound level dB(A)
						(CFM)	m^3/min	(mmH2O)	inch-H2O	
CD12025E12X	12	7~13.8	0.35	4.20	2900	82.93	2.322	6.98	0.275	41.9
CD12025L12X		7~13.8	0.60	7.20	4100	116.87	3.272	12.88	0.507	52.2
CD12025M12X		7~13.8	1.10	13.20	4900	136.82	3.831	16.74	0.659	56.2
CD12025H12X		7~13.8	1.80	21.60	5800	164.75	4.613	23.12	0.910	61.0
CD12025X12X		7~13.8	2.40	28.80	6500	184.40	5.163	27.64	1.088	64.9
CD12025U12X		7~13.8	3.10	37.20	7000	199.36	5.582	31.20	1.228	65.4
CD12025E24X	24	12~25.6	0.20	4.80	3300	93.58	2.620	8.87	0.349	46.5
CD12025L24X		12~25.6	0.30	7.20	4100	116.87	3.272	12.88	0.507	52.2
CD12025M24X		12~25.6	0.55	13.20	4900	136.82	3.831	16.74	0.659	56.2
CD12025H24X		12~25.6	0.90	21.60	5800	164.75	4.613	23.12	0.910	61.0
CD12025X24X		12~25.6	1.30	31.20	6500	184.40	5.163	27.64	1.088	64.9
CD12025U24X		12~25.6	1.80	43.20	7200	206.42	5.78	34.83	1.371	66.5

Specifications are subject to change without notice

NIKCOOL

DONGGUAN YIJIN ELECTRONIC CO.,LTD