DC 120x120x25mm - C

General Specifications

Material:……Frame:Plastic(UL94V0)
Impeller: ……..Impeller:Plastic(UL94V0)
Expected Life: ……FDB Bearing 60,000hrs (40℃)
Ball Bearing 50,000hrs (40℃)
Long Life Bearing 25,000hrs (40℃)
Lead Wire: ……..+red -black or yellow Signal,blue Speed control
Temperature Range: ……..Operating temperature -10℃～70℃(Humiditumidity 35%~85%RH)
Storagetemperature -30℃～70℃(Humiditumidity 35%~85%RH)
Signal output: ……..FG Signal /RD Signal
Speed control mode: ……PWM Control

Dimensions

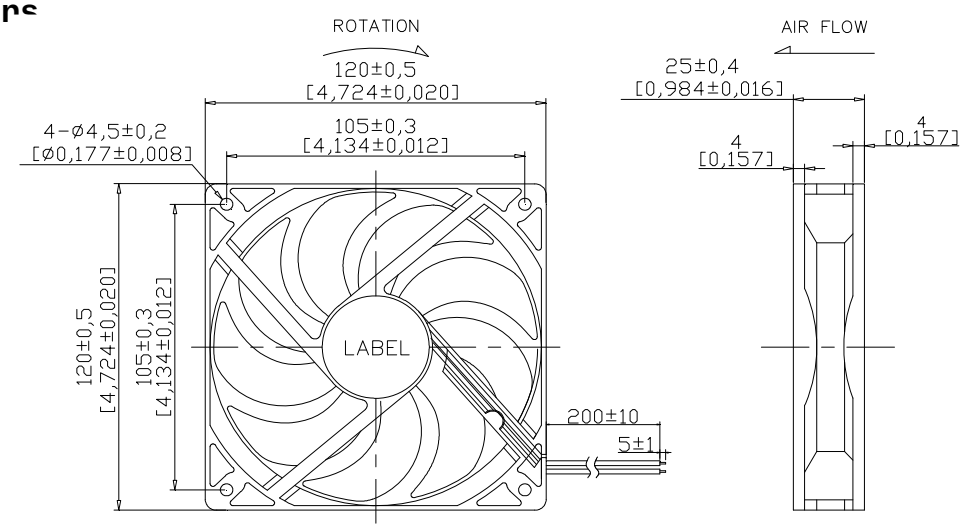

Air Flow - Static Pressure Characteristics

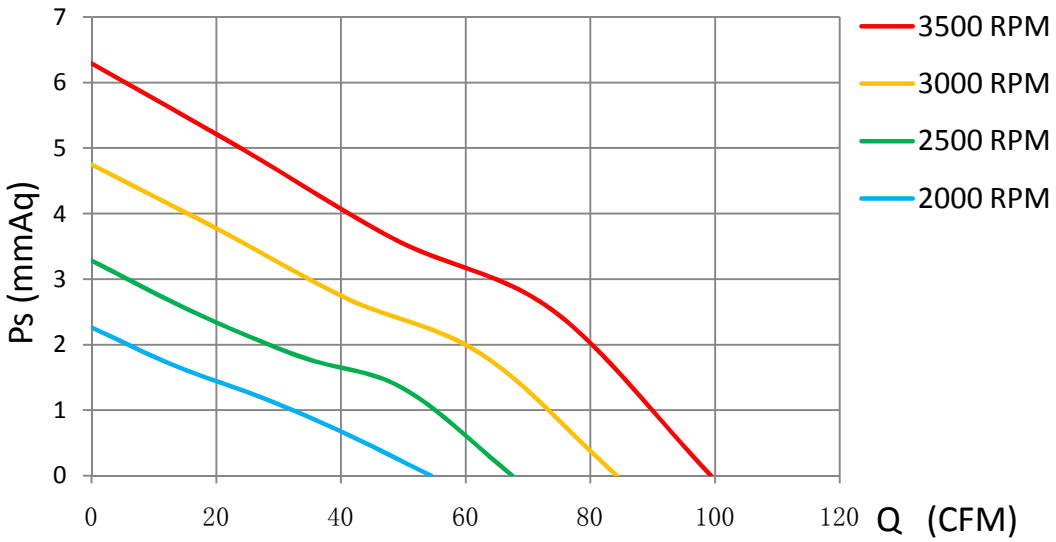

MODEL	Rated Voltage (V)	Operating Voltage Range (V)	Rated Current (Amp)	Rated Input Power (W)	Rated Speed (rpm)	Air Flow		Static Pressure		Sound level dB(A)
						(CFM)	m^3/min	(mmH2O)	inch-H2O	
CD12025L12X	12	7~13.8	0.20	2.40	2000	54.49	1.542	2.26	0.089	31.6
CD12025M12X		7~13.8	0.33	3.96	2500	67.52	1.911	3.28	0.129	38.0
CD12025H12X		7~13.8	0.45	5.40	3000	84.28	2.385	4.75	0.187	42.3
CD12025X12X		7~13.8	0.60	7.20	3500	99.36	2.812	6.29	0.248	46.8
CD12025L24X	24	12~25.6	0.12	2.88	2000	54.49	1.542	2.26	0.089	31.6
CD12025M24X		12~25.6	0.16	3.84	2500	67.52	1.911	3.28	0.129	38.0
CD12025H24X		12~25.6	0.23	5.52	3000	84.28	2.385	4.75	0.187	42.3
CD12025X24X		12~25.6	0.30	7.20	3500	99.36	2.812	6.29	0.248	46.8

Specifications are subject to change without notice

NIKCOOL

DONGGUAN YIJIN ELECTRONIC CO.,LTD