DC 120x120x25mm - B

General Specifications

Material:……..Frame:Plastic(UL94V0)
Impeller: ……Impeller:Plastic(UL94V0)
Expected Life: ……FDB Bearing 60,000hrs (40℃)
Ball Bearing 50,000hrs (40℃)
Long Life Bearing 25,000hrs (40℃)
Lead Wire: ……+red -black or yellow Signal,blue Speed control
Temperature Range: ……..Operating temperature -10℃～70℃(Humiditumidity 35%~85%RH)
Storagetemperature -30℃～70℃(Humiditumidity 35%~85%RH)
Signal output: ……FG Signal /RD Signal
Speed control mode: ……..PWM Control

Dimensions

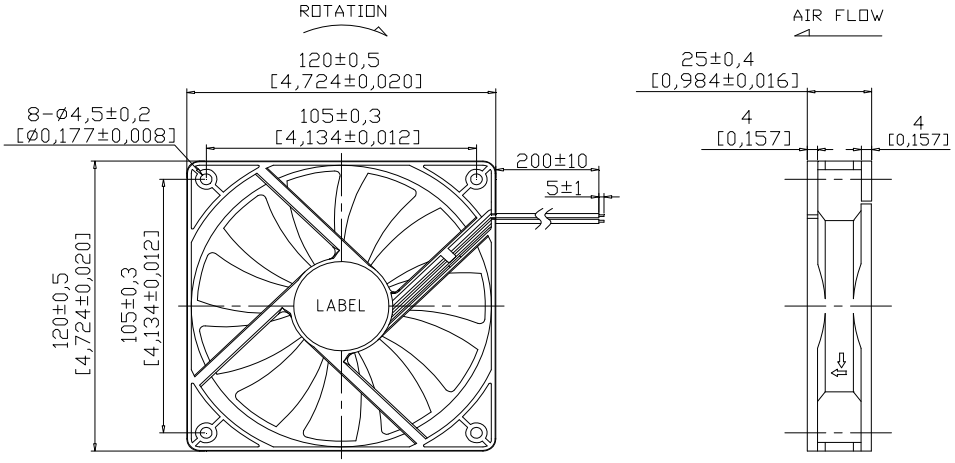

Air Flow - Static Pressure Characteristics

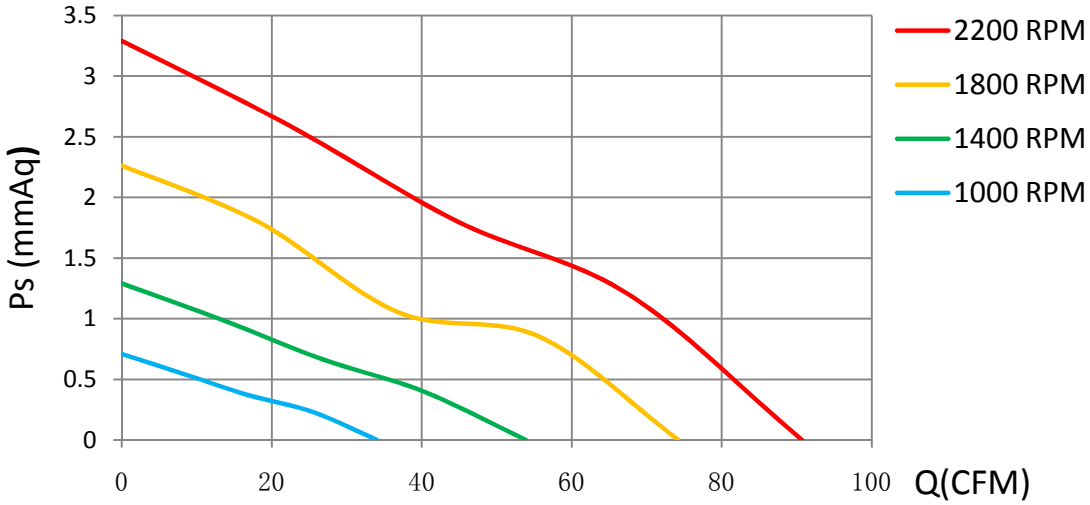

MODEL	Rated Voltage (V)	Operating Voltage Range (V)	Rated Current (Amp)	Rated Input Power (W)	Rated Speed (rpm)	Air Flow		Static Pressure		Sound level
						(CFM)	m^3/min	(mmH2O)	inch-H2O	dB(A)
CD12025L12X	12	7~13.8	0.33	3.96	1000	34.07	0.954	0.71	0.028	18.60
CD12025M12X		7~13.8	0.45	5.40	1400	53.91	1.509	1.29	0.051	27.30
CD12025M12X		7~13.8	0.45	5.40	1800	74.22	2.078	2.26	0.089	34.70
CD12025H12X		7~13.8	0.58	6.96	2200	90.73	2.540	3.29	0.130	40.50
CD12025L24X	24	12~25.6	0.14	3.36	1000	34.07	0.954	0.71	0.028	18.60
CD12025M24X		12~25.6	0.20	4.80	1400	53.91	1.509	1.29	0.051	27.30
CD12025M24X		12~25.6	0.20	4.80	1800	74.22	2.078	2.26	0.089	34.70
CD12025H24X		12~25.6	0.28	6.72	2200	90.73	2.540	3.29	0.130	40.50
CD12025L48X	48	28~56	0.12	5.76	1000	34.07	0.954	0.71	0.028	18.60
CD12025M48X		28~56	0.18	8.64	1400	53.91	1.509	1.29	0.051	27.30
CD12025M48X		28~56	0.18	8.64	1800	74.22	2.078	2.26	0.089	34.70
CD12025H48X		28~56	0.26	12.48	2200	90.73	2.540	3.29	0.130	40.50

Specifications are subject to change without notice

NIKCOOL

DONGGUAN YIJIN ELECTRONIC CO.,LTD