DC 120x120x25mm - A

General Specifications

Material:……Frame:Plastic(UL94V0)
Impeller: ……..Impeller:Plastic(UL94V0)
Expected Life: ……FDB Bearing 60,000hrs (40℃)
Ball Bearing 50,000hrs (40℃)
Long Life Bearing 25,000hrs (40℃)
Lead Wire: ……..+red -black or yellow Signal,blue Speed control
Temperature Range: ……..Operating temperature -10℃～70℃(Humiditumidity 35%~85%RH)
Storagetemperature -30℃～70℃(Humiditumidity 35%~85%RH)
Signal output: ……..FG Signal /RD Signal
Speed control mode: ……PWM Control

Dimensions

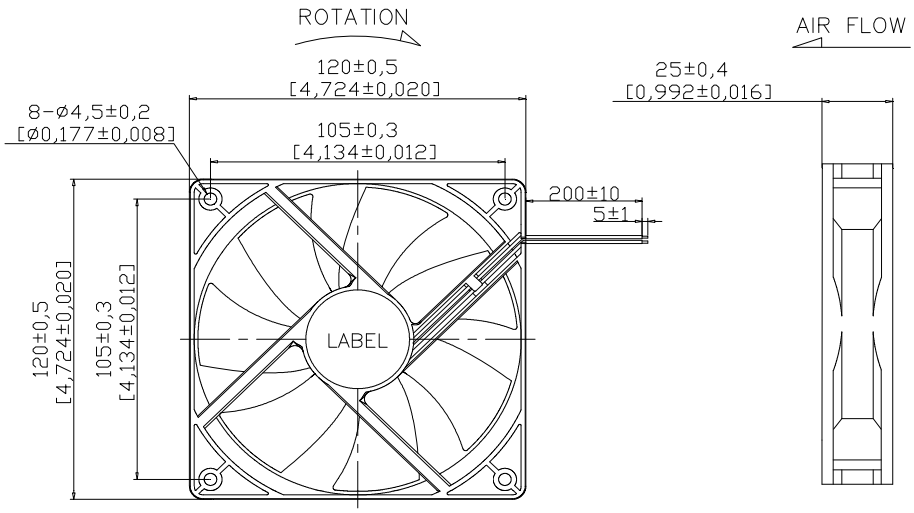

Air Flow - Static Pressure Characteristics

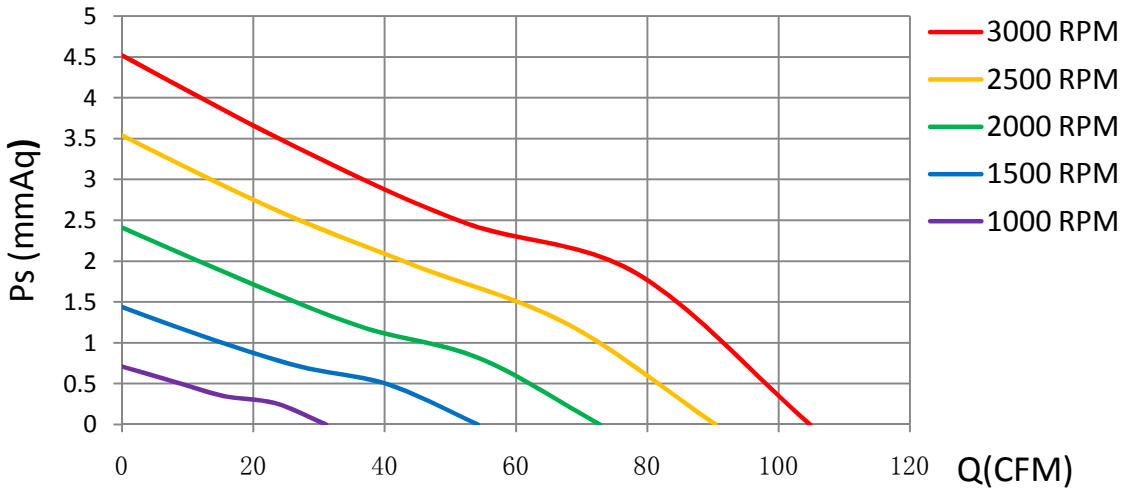

MODEL	Rated Voltage (V)	Operating Voltage Range (V)	Rated Current (Amp)	Rated Input Power (W)	Rated Speed (rpm)	Air Flow		Static Pressure		Sound level dB(A)
						(CFM)	m^3/min	(mmH2O)	inch-H2O	
CD12025E12X	12	7~13.8	0.16	1.92	1000	31.10	0.871	0.71	0.028	16.6
CD12025L12X		7~13.8	0.25	3.00	1500	54.23	1.518	1.44	0.057	26.2
CD12025M12X		7~13.8	0.33	3.96	2000	72.81	2.039	2.41	0.095	34.5
CD12025H12X		7~13.8	0.45	5.40	2500	90.40	2.531	3.54	0.139	40.4
CD12025X12X		7~13.8	0.58	6.96	3000	104.82	2.935	4.52	0.178	45.8
CD12025L24X	24	12~25.6	0.14	3.36	1500	54.23	1.518	1.44	0.057	26.2
CD12025M24X		12~25.6	0.20	4.80	2000	72.81	2.039	2.41	0.095	34.5
CD12025H24X		12~25.6	0.28	6.72	2500	90.40	2.531	3.54	0.139	40.4
CD12025X24X		12~25.6	0.36	8.64	3000	104.82	2.935	4.52	0.178	45.8

Specifications are subject to change without notice

NIKCOOL

DONGGUAN YIJIN ELECTRONIC CO.,LTD