DC 92x92x25mm - B

General Specifications

Material:……..Frame:Plastic(UL94V0)
Impeller: ……Impeller:Plastic(UL94V0)
Expected Life: ……FDB Bearing 60,000hrs (40℃)
Ball Bearing 50,000hrs (40℃)
Long Life Bearing 25,000hrs (40℃)
Lead Wire: ……+red -black or yellow Signal,blue Speed control
Temperature Range: ……Operating temperature -10℃～70℃(Humiditumidity 35%~85%RH)
Storagetemperature -30℃～70℃(Humiditumidity 35%~85%RH)
Signal output: ……FG Signal /RD Signal
Speed control mode: ……PWM Control

Dimensions

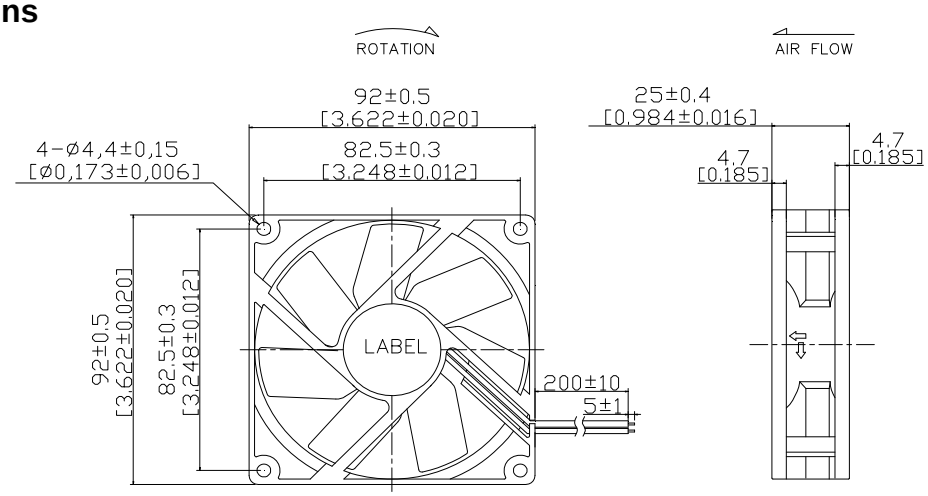

Air Flow - Static Pressure Characteristics

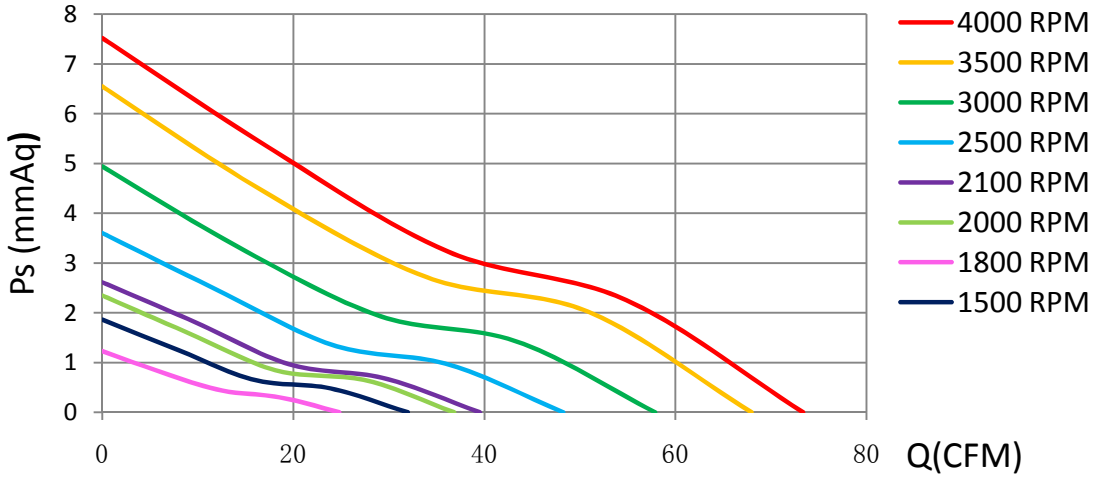

MODEL	Rated Voltage (V)	Operating Voltage Range (V)	Rated Current (Amp)	Rated Input Power (W)	Rated Speed (rpm)	Air Flow		Static Pressure		Sound level dB(A)
						(CFM)	m^3/min	(mmH2O)	inch-H2O	
CD9225L05X	5	4~5.6	0.16	0.80	1500	24.80	0.694	1.23	0.048	21.6
CD9225M05X		4~5.6	0.23	1.15	1800	31.99	0.896	1.86	0.073	25.2
CD9225H05X		4~5.6	0.29	1.45	2100	39.53	1.107	2.61	0.103	28.9
CD9225L12X	12	7~13.8	0.20	2.40	2000	36.85	1.032	2.35	0.093	27.2
CD9225M12X		7~13.8	0.30	3.60	2500	48.26	1.351	3.60	0.142	32.9
CD9225H12X		7~13.8	0.40	4.80	3000	57.87	1.620	4.94	0.194	38.5
CD9225X12X		7~13.8	0.45	5.40	3500	67.96	1.903	6.55	0.258	43.0
CD9225L24X	24	12~25.6	0.18	4.32	2500	48.26	1.351	3.60	0.142	32.9
CD9225M24X		12~25.6	0.24	5.76	3000	57.87	1.620	4.94	0.194	38.5
CD9225H24X		12~25.6	0.32	7.68	3500	67.96	1.903	6.55	0.258	43.0
CD9225X24X		12~25.6	0.40	9.60	4000	73.35	2.054	7.52	0.296	46.4

Specifications are subject to change without notice

NIKCOOL
DONGGUAN YIJIN ELECTRONIC CO.,LTD