DC 80x80x38mm - A

General Specifications

Material:……Frame:Plastic(UL94V0)
Impeller: ……Impeller:Plastic(UL94V0)
Expected Life: ……FDB Bearing 60,000hrs (40℃)
Ball Bearing 50,000hrs (40℃)
Long Life Bearing 25,000hrs (40℃)
Lead Wire: ……+red -black or yellow Signal,blue Speed control
Temperature Range: ……Operating temperature -10℃～70℃(Humiditumidity 35%~85%RH)
Storagetemperature -30℃～70℃(Humiditumidity 35%~85%RH)
Signal output: ……FG Signal /RD Signal
Speed control mode: ……PWM Control

Dimensions

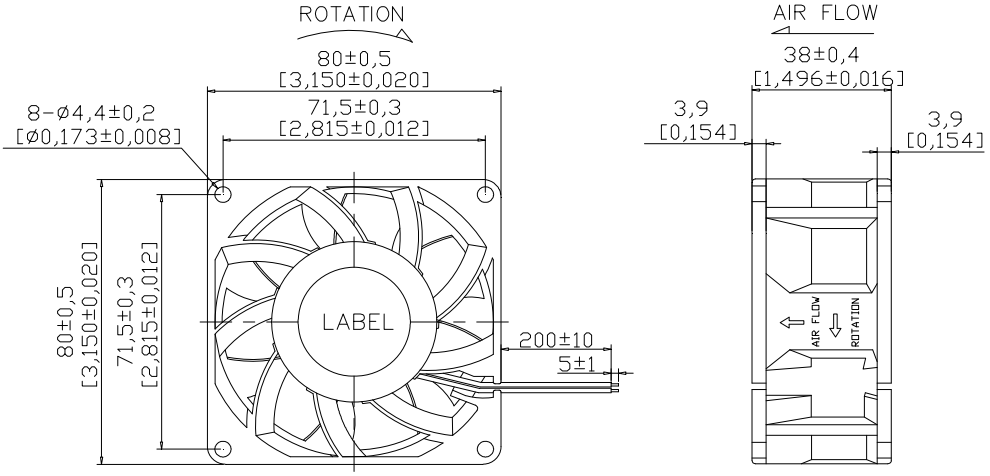

Air Flow - Static Pressure Characteristics

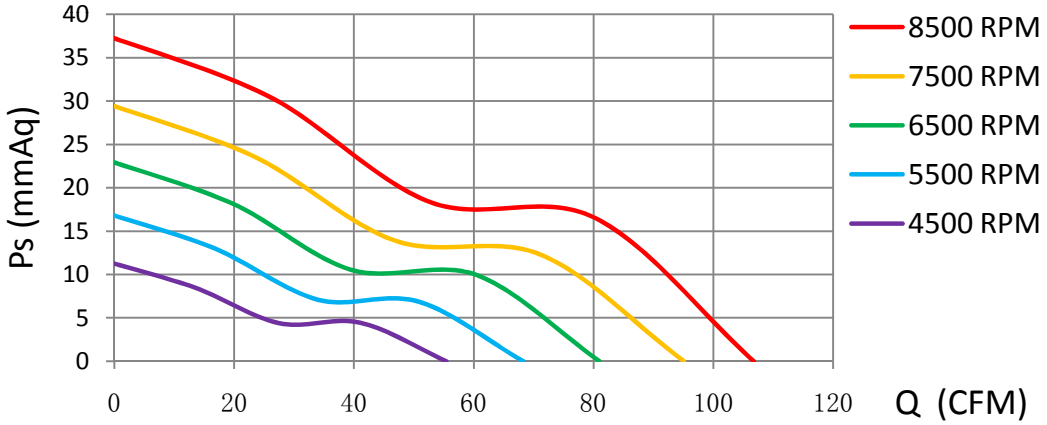

MODEL	Rated Voltage (V)	Operating Voltage Range (V)	Rated Current (Amp)	Rated Input Power (W)	Rated Speed (rpm)	Air Flow		Static Pressure		Sound level dB(A)
						(CFM)	m^3/min	(mmH2O)	inch-H2O	
CD8038E12X	12	7~13.8	0.50	6.00	4500	55.40	1.551	11.25	0.443	51.4
CD8038L12X		7~13.8	1.00	12.00	5500	68.24	1.911	16.78	0.661	56.0
CD8038M12X		7~13.8	1.50	18.00	6500	80.95	2.267	22.91	0.902	61.2
CD8038H12X		7~13.8	2.00	24.00	7500	95.10	2.663	29.40	1.157	65.2
CD8038X12X		7~13.8	2.70	32.40	8500	106.75	2.989	37.20	1.465	66.4
CD8038E24X	24	12~25.6	0.30	7.20	4500	55.40	1.551	11.25	0.443	51.4
CD8038L24X		12~25.6	0.50	12.00	5500	68.24	1.911	16.78	0.661	56.0
CD8038M24X		12~25.6	0.80	19.20	6500	80.95	2.267	22.91	0.902	61.2
CD8038H24X		12~25.6	1.20	28.80	7500	95.10	2.663	29.40	1.157	65.2
CD8038X24X		12~25.6	1.60	38.40	8500	106.75	2.989	37.20	1.465	66.4
CD8038E48X	48	36~54	0.4	19.2	4500	55.40	1.551	11.25	0.443	51.4
CD8038L48X		36~54	0.5	24	5500	68.24	1.911	16.78	0.661	56.0
CD8038M48X		36~54	0.6	28.8	6500	80.95	2.267	22.91	0.902	61.2
CD8038H48X		36~54	0.7	33.6	7500	95.10	2.663	29.40	1.157	65.2
CD8038X48X		36~54	0.8	38.4	8500	106.75	2.989	37.20	1.465	66.4

Specifications are subject to change without notice

NIKCOOL

DONGGUAN YIJIN ELECTRONIC CO.,LTD