DC 80x80x25mm - D

General Specifications

Material:……Frame:Plastic(UL94V0)
Impeller: ……Impeller:Plastic(UL94V0)
Expected Life: ……FDB Bearing 60,000hrs (40℃)
Ball Bearing 50,000hrs (40℃)
Long Life Bearing 25,000hrs (40℃)
Lead Wire: ……+red -black or yellow Signal,blue Speed control
Temperature Range: ……Operating temperature -10℃～70℃(Humiditumidity 35%~85%RH)
Storagetemperature -30℃～70℃(Humiditumidity 35%~85%RH)
Signal output: ……FG Signal /RD Signal
Speed control mode: ……PWM Control

Dimensions

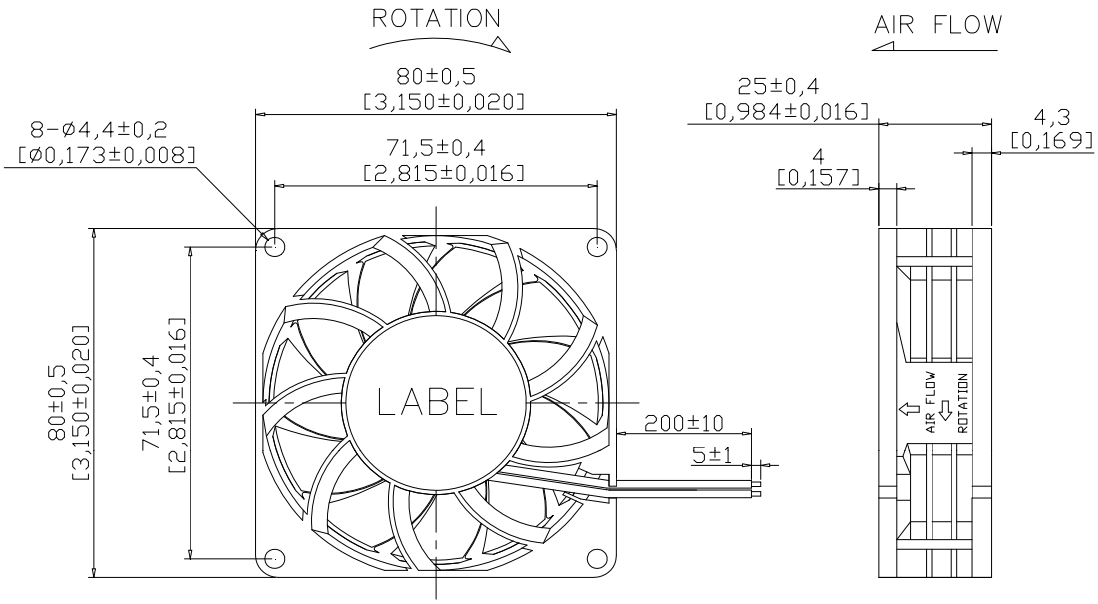

Air Flow - Static Pressure Characteristics

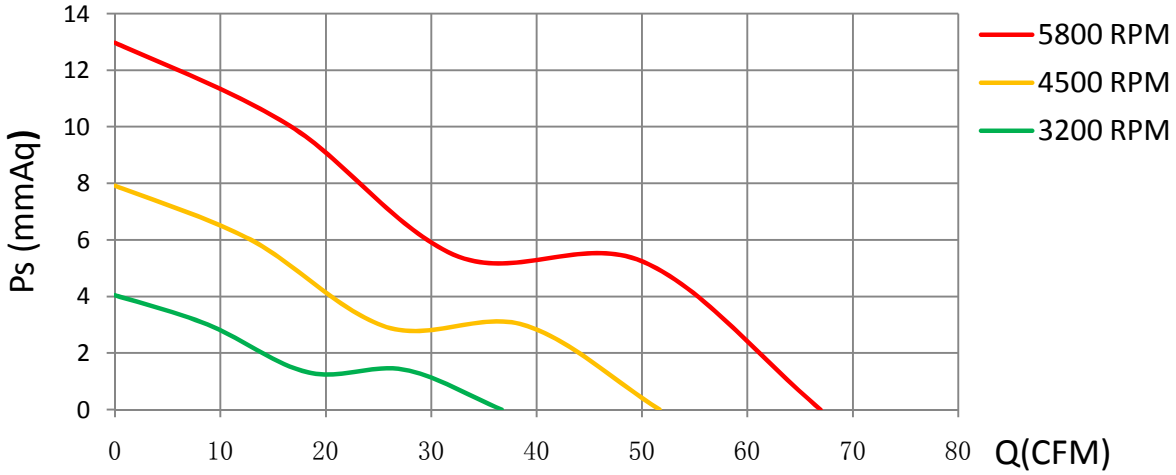

MODEL	Rated Voltage (V)	Operating Voltage Range (V)	Rated Current (Amp)	Rated Input Power (W)	Rated Speed (rpm)	Air Flow		Static Pressure		Sound level dB(A)
						(CFM)	m^3/min	(mmH2O)	inch-H2O	
CD8025L12X	12	7~13.8	0.30	3.60	3200	36.67	1.027	4.04	0.165	35.8
CD8025M12X		7~13.8	0.45	5.40	4500	51.64	1.446	7.92	0.324	45.6
CD8025H12X		7~13.8	0.65	7.80	5800	66.94	1.874	12.98	0.531	52.2
CD8025L24X	24	12~25.6	0.12	2.88	3200	36.67	1.027	4.04	0.165	35.8
CD8025M24X		12~25.6	0.22	5.28	4500	51.64	1.446	7.92	0.324	45.6
CD8025H24X		12~25.6	0.32	7.68	5800	66.94	1.874	12.98	0.531	52.2

Specifications are subject to change without notice

NIKCOOL

DONGGUAN YIJIN ELECTRONIC CO.,LTD