DC 80x80x25mm - A

General Specifications

Material:……..Frame:Plastic(UL94V0)
Impeller: ……Impeller:Plastic(UL94V0)
Expected Life: ……..FDB Bearing 60,000hrs (40℃)
Ball Bearing 50,000hrs (40℃)
Long Life Bearing 25,000hrs (40℃)
Sleeve Bearing 20,000hrs (40℃)
Lead Wire: ……+red -black or yellow Signal,blue Speed control
Temperature Range: ……..Operating temperature -10℃～70℃(Humiditumidity 35%~85%RH)
Storagetemperature -30℃～70℃(Humiditumidity 35%~85%RH)
Signal output: ……..FG Signal /RD Signal
Speed control mode: ……..PWM Control

Dimensions

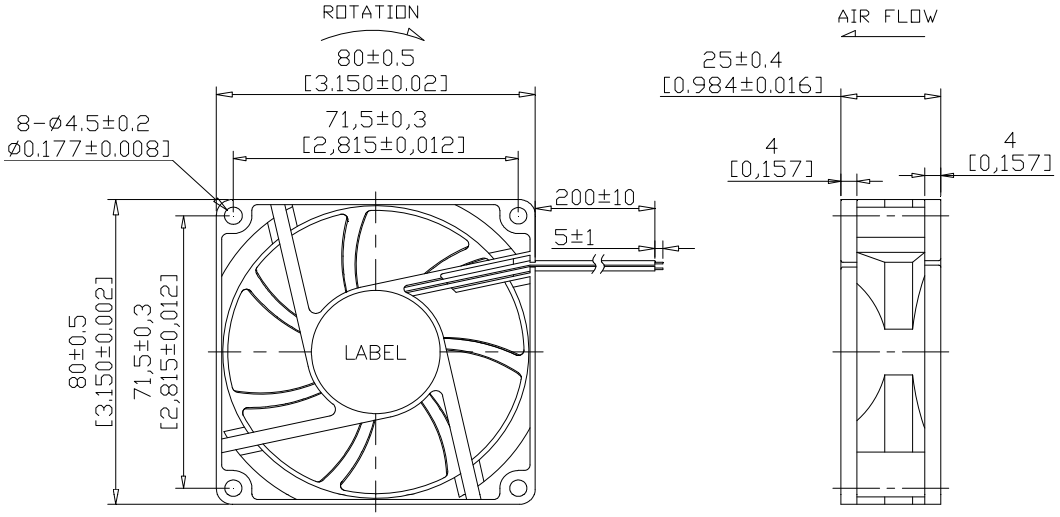

Air Flow - Static Pressure Characteristics

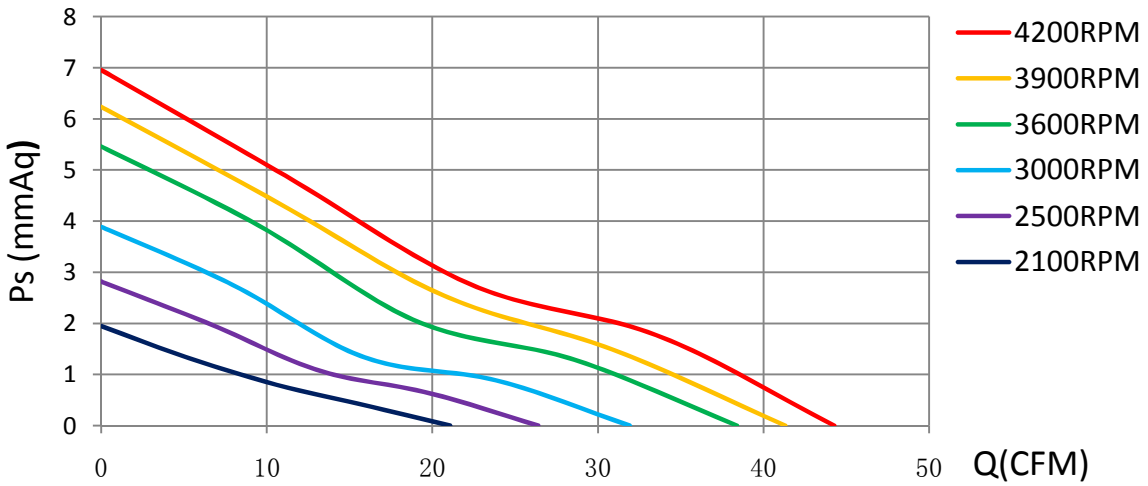

MODEL	Rated Voltage (V)	Operating Voltage Range (V)	Rated Current (Amp)	Rated Input Power (W)	Rated Speed (rpm)	Air Flow		Static Pressure		Sound level dB(A)
						(CFM)	m^3/min	(mmH2O)	inch-H2O	
CD8025L05X	5	4~5.5	0.17	0.85	2100	21.06	0.590	1.95	0.077	24.0
CD8025M05X		4~5.5	0.25	1.25	2500	26.38	0.739	2.82	0.111	29.4
CD8025H05X		4~5.5	0.35	1.75	3000	31.91	0.893	3.89	0.153	34.6
CD8025L12X	12	7~13.8	0.17	2.04	3600	38.40	1.075	5.46	0.215	38.7
CD8025M12X		7~13.8	0.25	3.00	3900	41.31	1.157	6.24	0.246	40.6
CD8025H12X		7~13.8	0.35	4.20	4200	44.28	1.240	6.96	0.274	42.8
CD8025L24X	24	12~25.6	0.15	3.60	3600	38.40	1.075	5.46	0.215	38.7
CD8025M24X		12~25.7	0.23	5.52	3900	41.31	1.157	6.24	0.246	40.6
CD8025H24X		12~25.8	0.33	7.92	4200	44.28	1.240	6.96	0.274	42.8

Specifications are subject to change without notice

NIKCOOL

DONGGUAN YIJIN ELECTRONIC CO.,LTD