DC 80x80x20mm - A

General Specifications

Material:……..Frame:Plastic(UL94V0)
Impeller: ……Impeller:Plastic(UL94V0)
Expected Life: ……..FDB Bearing 60,000hrs (40℃)
Ball Bearing 50,000hrs (40℃)
Long Life Bearing 25,000hrs (40℃)
Lead Wire: ……+red -black or yellow Signal,blue Speed control
Temperature Range: ……Operating temperature -10℃～70℃(Humiditumidity 35%~85%RH)
Storagetemperature -30℃～70℃(Humiditumidity 35%~85%RH)
Signal output: ……FG Signal /RD Signal
Speed control mode: ……..PWM Control

Dimensions

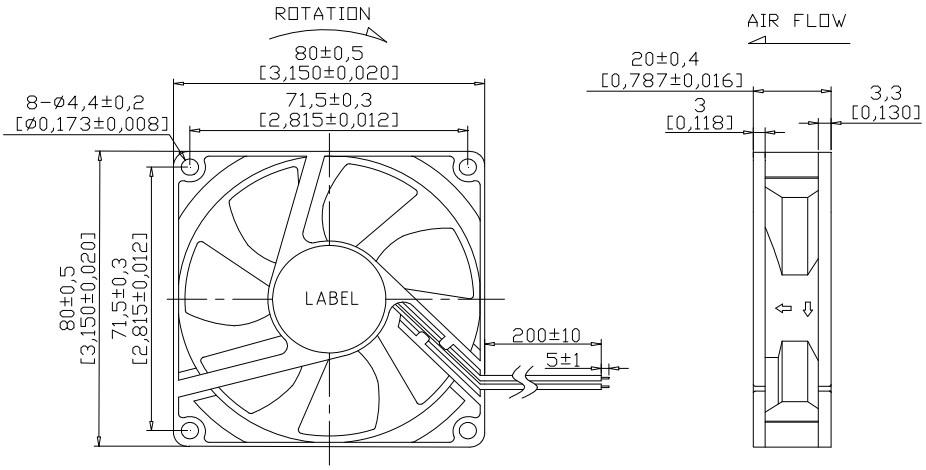

Air Flow - Static Pressure Characteristics

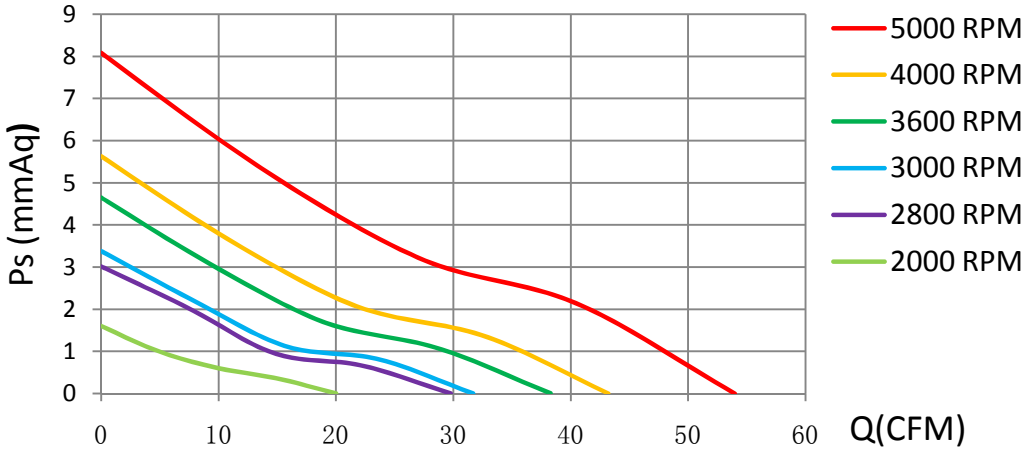

MODEL	Rated Voltage (V)	Operating Voltage Range (V)	Rated Current (Amp)	Rated Input Power (W)	Rated Speed (rpm)	Air Flow		Static Pressure		Sound level dB(A)
						(CFM)	m^3/min	(mmH2O)	inch-H2O	
CD8020L05X	5	4~5.6	0.10	0.50	2000	20.04	0.561	1.60	0.063	20.2
CD8020M05X		4~5.6	0.25	1.25	2800	29.80	0.834	3.01	0.119	30.5
CD8020H05X		4~5.6	0.36	1.80	3600	38.31	1.073	4.65	0.183	37.2
CD8020E12X	12	7~13.8	0.10	1.20	2000	20.04	0.561	1.60	0.063	20.2
CD8020L12X		7~13.8	0.17	2.04	3000	31.71	0.888	3.38	0.133	32.8
CD8020M12X		7~13.8	0.26	3.12	4000	43.21	1.210	5.63	0.222	39.7
CD8020H12X		7~13.8	0.37	4.44	5000	53.99	1.512	8.08	0.318	45.7
CD8020L24X	24	12~25.6	0.05	1.20	2000	20.04	0.561	1.60	0.063	20.2
CD8020M24X		12~25.6	0.08	1.92	3000	31.71	0.888	3.38	0.133	32.8
CD8020H24X		12~25.6	0.13	3.12	4000	43.21	1.210	5.63	0.222	39.7
CD8020X24X		12~25.6	0.18	4.32	5000	53.99	1.512	8.08	0.318	45.7

Specifications are subject to change without notice

NIKCOOL

DONGGUAN YIJIN ELECTRONIC CO.,LTD