DC 80x80x10mm - A

General Specifications

Material:……...Frame:Plastic(UL94V0)
Impeller: ……Impeller:Plastic(UL94V0)
Expected Life: ……FDB Bearing 60,000hrs (40℃)
Ball Bearing 50,000hrs (40℃)
Long Life Bearing 25,000hrs (40℃)
Lead Wire: ……...+red -black or yellow Signal,blue Speed control
Temperature Range: ……Operating temperature -10℃～70℃(Humiditumidity 35%~85%RH)
Storagetemperature -30℃～70℃(Humiditumidity 35%~85%RH)
Signal output: ……FG Signal /RD Signal
Speed control mode: ……..PWM Control

Dimensions

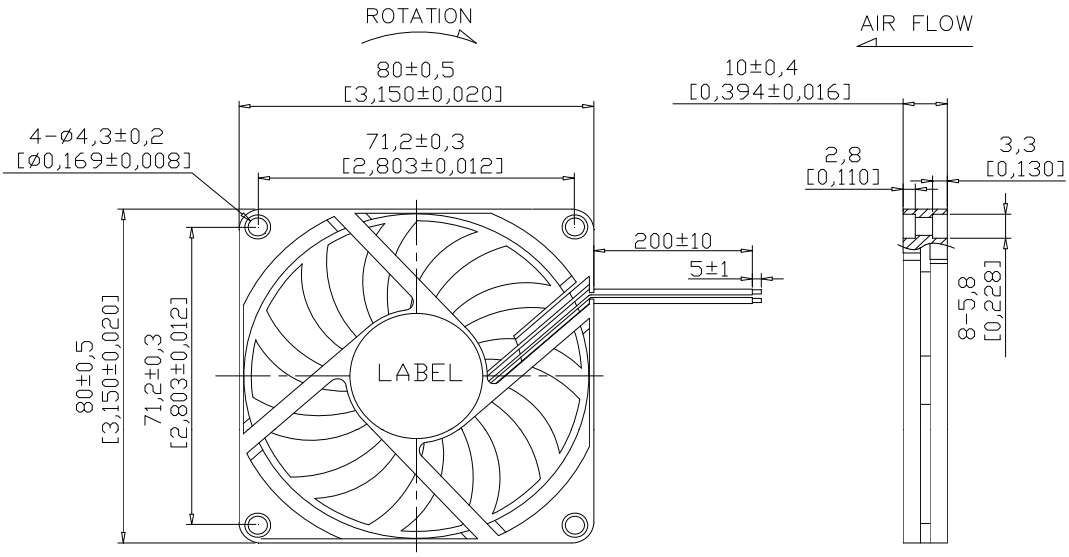

Air Flow - Static Pressure Characteristics

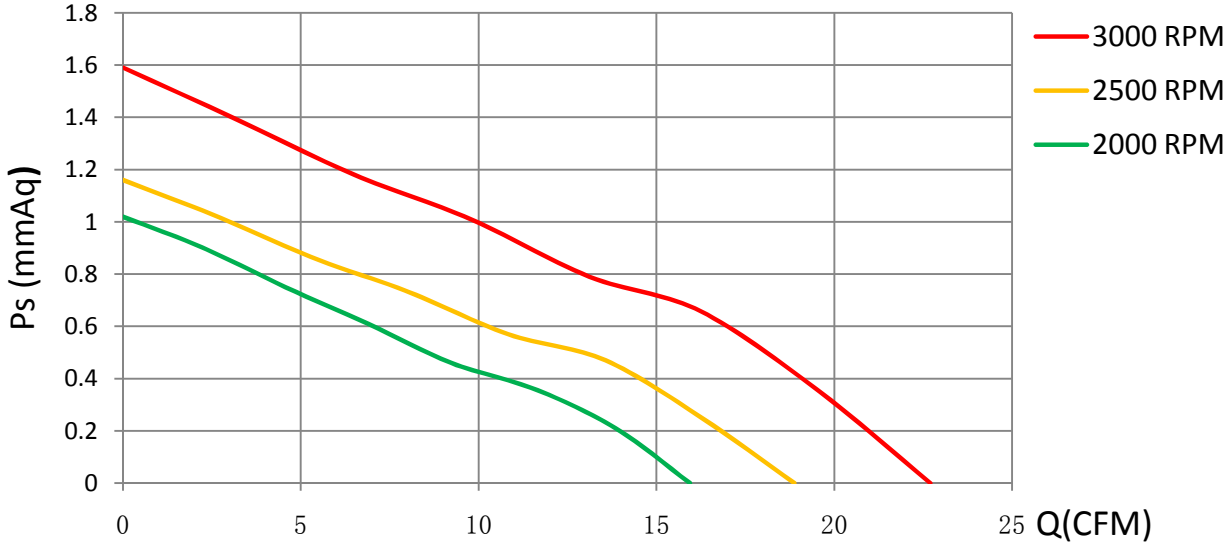

MODEL	Rated Voltage (V)	Operating Voltage Range (V)	Rated Current (Amp)	Rated Input Power (W)	Rated Speed (rpm)	Air Flow		Static Pressure		Sound level dB(A)
						(CFM)	m^3/min	(mmH2O)	inch-H2O	
CD8010L05X	5	4~5.5	0.36	1.80	2000	15.94	0.446	1.02	0.041	21.7
CD8010M05X		4~5.5	0.42	2.10	2500	18.88	0.529	1.16	0.046	26.4
CD8010L12X	12	7~13.8	0.12	1.44	2000	15.94	0.446	1.02	0.041	21.7
CD8010M12X		7~13.8	0.19	2.28	2500	18.88	0.529	1.16	0.046	26.4
CD8010H12X		7~13.8	0.24	2.88	3000	22.70	0.636	1.59	0.064	31.8

Specifications are subject to change without notice

NIKCOOL
DONGGUAN YIJIN ELECTRONIC CO.,LTD