DC 70x70x25mm - A

General Specifications

Material:……Frame:Plastic(UL94V0)
Impeller: ……..Impeller:Plastic(UL94V0)
Expected Life: ……FDB Bearing 60,000hrs (40℃)
Ball Bearing 50,000hrs (40℃)
Long Life Bearing 25,000hrs (40℃)
Lead Wire: ……+red -black or yellow Signal,blue Speed control
Temperature Range: ……Operating temperature -10℃～70℃(Humiditumidity 35%~85%RH)
Storagetemperature -30℃～70℃(Humiditumidity 35%~85%RH)
Signal output: ……..FG Signal /RD Signal
Speed control mode: ……PWM Control

Dimensions

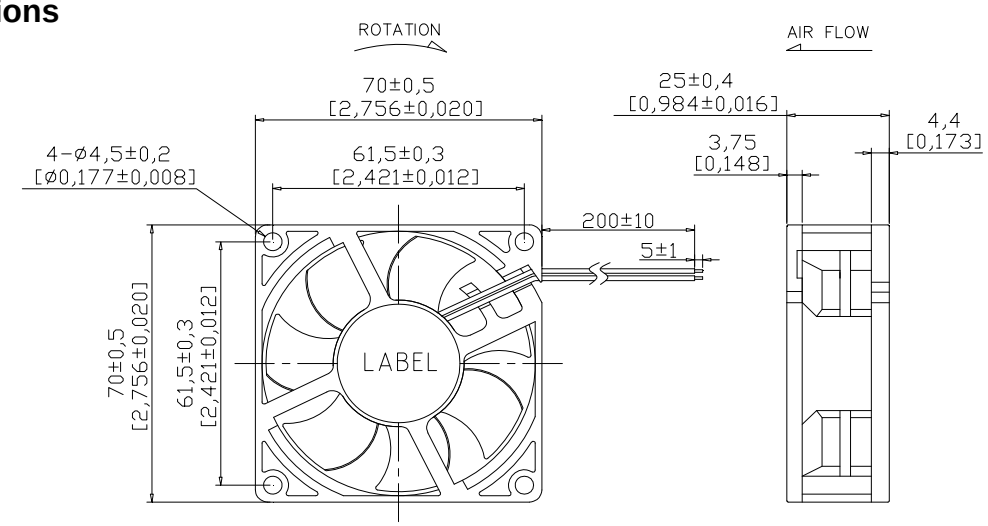

Air Flow - Static Pressure Characteristics

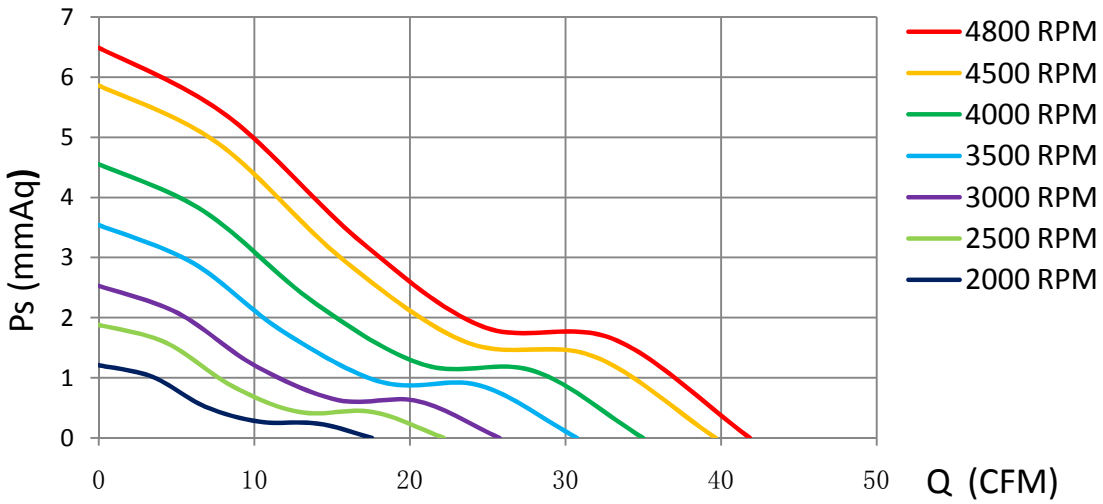

MODEL	Rated Voltage (V)	Operating Voltage Range (V)	Rated Current (Amp)	Rated Input Power (W)	Rated Speed (rpm)	Air Flow		Static Pressure		Sound level dB(A)
						(CFM)	m^3/min	(mmH2O)	inch-H2O	
CD7025L05X	5	4~5.5	0.15	0.75	2000	17.55	0.491	1.21	0.049	21.2
CD7025M05X		4~5.5	0.25	1.25	2500	22.18	0.621	1.88	0.076	27.5
CD7025H05X		4~5.5	0.35	1.75	3000	25.76	0.721	2.53	0.103	31.9
CD7025L12X	12	7~13.8	0.18	2.16	2500	22.18	0.621	1.88	0.076	27.5
CD7025M12X		7~13.8	0.28	3.36	3500	30.74	0.861	3.54	0.144	36.8
CD7025H12X		7~13.8	0.38	4.56	4500	39.66	1.110	5.86	0.238	43.8
CD7025L24X	24	12~25.6	0.12	2.88	3000	25.76	0.721	2.53	0.103	31.9
CD7025M24X		12~25.6	0.19	4.56	4000	34.99	0.980	4.55	0.185	40.5
CD7025H24X		12~25.6	0.25	6.00	4800	41.85	1.172	6.49	0.264	45.5

Specifications are subject to change without notice

NIKCOOL

DONGGUAN YIJIN ELECTRONIC CO.,LTD