DC 60x60x25mm - B

General Specifications

Material:……....Frame:Plastic(UL94V0)
Impeller: ……..Impeller:Plastic(UL94V0)
Expected Life: ……..FDB Bearing 60,000hrs (40℃)
Ball Bearing 50,000hrs (40℃)
Long Life Bearing 25,000hrs (40℃)
Lead Wire: ……..+red -black or yellow Signal,blue Speed control
Temperature Range: ……..Operating temperature -10℃～70℃(Humiditumidity 35%~85%RH)
Storagetemperature -30℃～70℃(Humiditumidity 35%~85%RH)
Signal output: ……..FG Signal /RD Signal
Speed control mode: ……..PWM Control

Dimensions

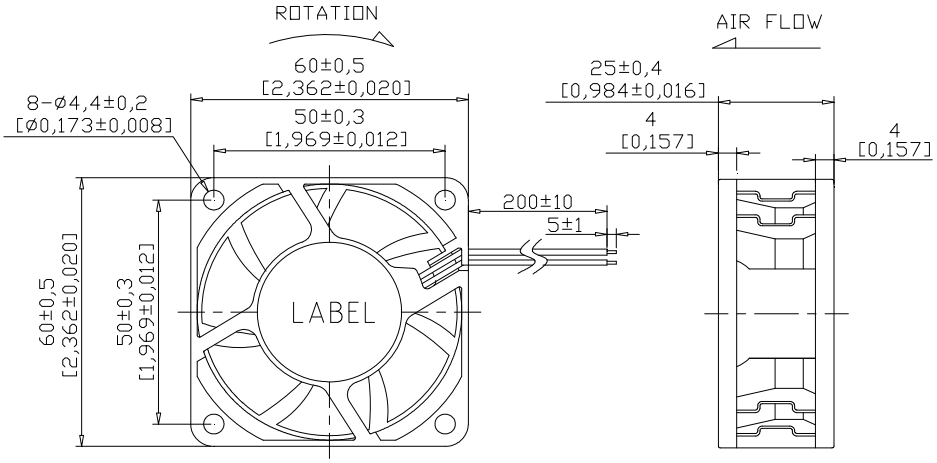

Air Flow - Static Pressure Characteristics

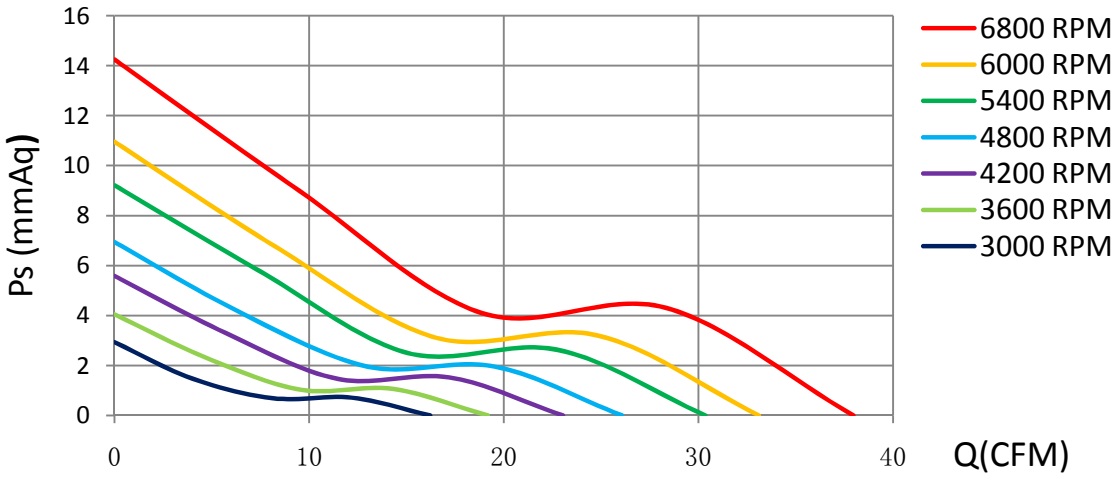

MODEL	Rated Voltage (V)	Operating Voltage Range (V)	Rated Current (Amp)	Rated Input Power (W)	Rated Speed (rpm)	Air Flow		Static Pressure		Sound level dB(A)
						(CFM)	m^3/min	(mmH2O)	inch-H2O	
CD6025L05X	5	4~5.6	0.20	1.00	3000	16.21	0.454	2.93	0.115	24.0
CD6025M05X		4~5.6	0.27	1.35	3600	19.18	0.537	4.05	0.159	28.7
CD6025H05X		4~5.6	0.36	1.80	4200	23.04	0.645	5.59	0.220	32.6
CD6025E12X	12	7~13.8	0.11	1.32	3000	16.21	0.454	2.93	0.115	24.0
CD6025L12X		7~13.8	0.15	1.80	3600	19.18	0.537	4.05	0.159	28.7
CD6025M12X		7~13.8	0.27	3.24	4200	23.04	0.645	5.59	0.220	32.6
CD6025H12X		7~13.8	0.35	4.20	4800	26.07	0.730	6.94	0.273	37.4
CD6025L24X	24	12~25.6	0.11	2.64	4800	26.07	0.730	6.94	0.273	37.4
CD6025M24X		12~25.6	0.17	4.08	5400	30.35	0.850	9.22	0.363	41.2
CD6025H24X		12~25.6	0.22	5.28	6000	33.10	0.927	10.96	0.431	44.2
CD6025X24X		12~25.6	0.28	6.72	6800	37.96	1.063	14.25	0.561	47.3

Specifications are subject to change without notice

NIKCOOL

DONGGUAN YIJIN ELECTRONIC CO.,LTD