DC 60x60x20mm - C

General Specifications

Material:……Frame:Plastic(UL94V0)
Impeller: ……Impeller:Plastic(UL94V0)
Expected Life: ……FDB Bearing 60,000hrs (40℃)
Ball Bearing 50,000hrs (40℃)
Long Life Bearing 25,000hrs (40℃)
Lead Wire: ……+red -black or yellow Signal,blue Speed control
Temperature Range: ……Operating temperature -10℃～70℃(Humiditumidity 35%~85%RH)
Storagetemperature -30℃～70℃(Humiditumidity 35%~85%RH)
Signal output: ……FG Signal /RD Signal
Speed control mode: ……PWM Control

Dimensions

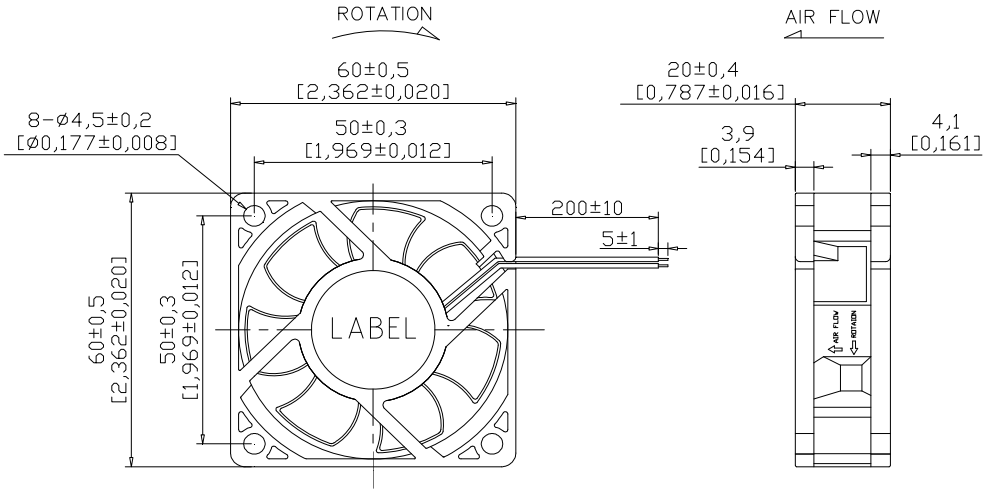

Air Flow - Static Pressure Characteristics

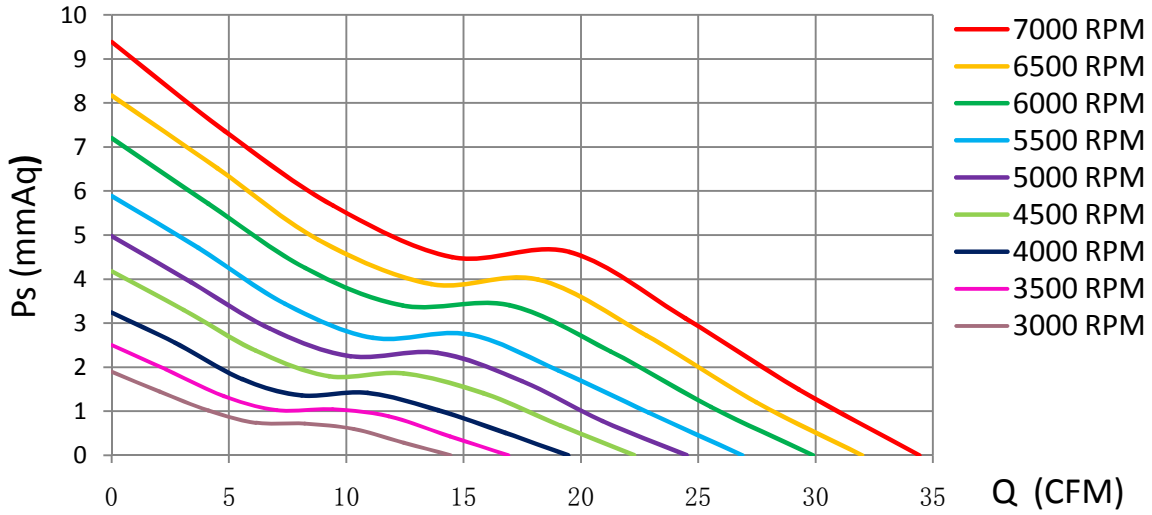

MODEL	Rated Voltage (V)	Operating Voltage Range (V)	Rated Current (Amp)	Rated Input Power (W)	Rated Speed (rpm)	Air Flow		Static Pressure		Sound level
						(CFM)	m^3/min	(mmH2O)	inch-H2O	dB(A)
CD6020L05X	5	4~5.5	0.12	0.60	3000	14.43	0.404	1.90	0.076	25.1
CD6020M05X		4~5.5	0.20	1.00	3500	16.91	0.473	2.50	0.101	28.4
CD6020H05X		4~5.5	0.30	1.50	4000	19.45	0.545	3.24	0.130	32.1
CD6020L12X	12	7~13.8	0.19	2.28	4500	22.27	0.624	4.18	0.169	35.0
CD6020M12X		7~13.8	0.32	3.84	5500	26.88	0.753	5.89	0.237	40.1
CD6020H12X		7~13.8	0.45	5.40	6500	31.98	0.895	8.17	0.330	44.2
CD6020L24X	24	12~25.6	0.10	2.40	5000	24.51	0.686	4.98	0.200	37.2
CD6020M24X		12~25.6	0.16	3.84	6000	29.90	0.837	7.20	0.290	42.3
CD6020H24X		12~25.6	0.22	5.28	7000	34.43	0.964	9.38	0.379	46.2

Specifications are subject to change without notice

NIKCOOL

DONGGUAN YIJIN ELECTRONIC CO.,LTD