DC 60x60x20mm - A

General Specifications

Material:……Frame:Plastic(UL94V0)
Impeller: ……Impeller:Plastic(UL94V0)
Expected Life: ……FDB Bearing 60,000hrs (40℃)
Ball Bearing 50,000hrs (40℃)
Long Life Bearing 25,000hrs (40℃)
Lead Wire: ……+red -black or yellow Signal,blue Speed control
Temperature Range: ……Operating temperature -10℃～70℃(Humiditumidity 35%~85%RH)
Storagetemperature -30℃～70℃(Humiditumidity 35%~85%RH)
Signal output: ……FGSignal /RD Signal
Speed control mode: ……..PWM Control

Dimensions

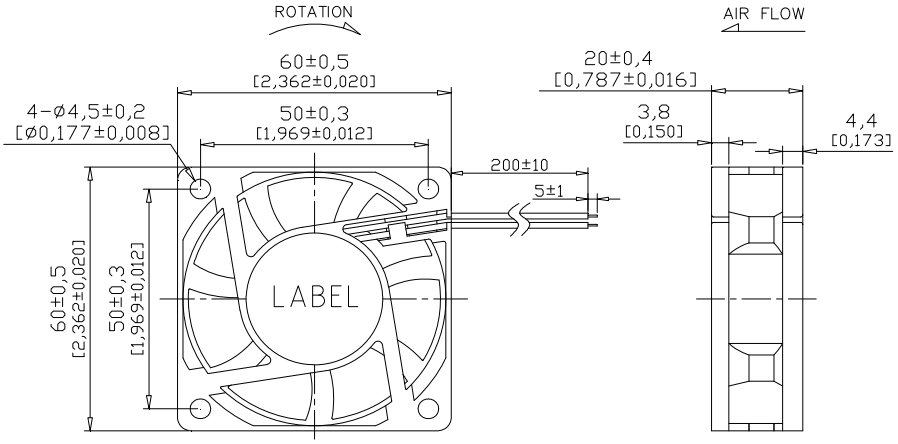

Air Flow - Static Pressure Characteristics

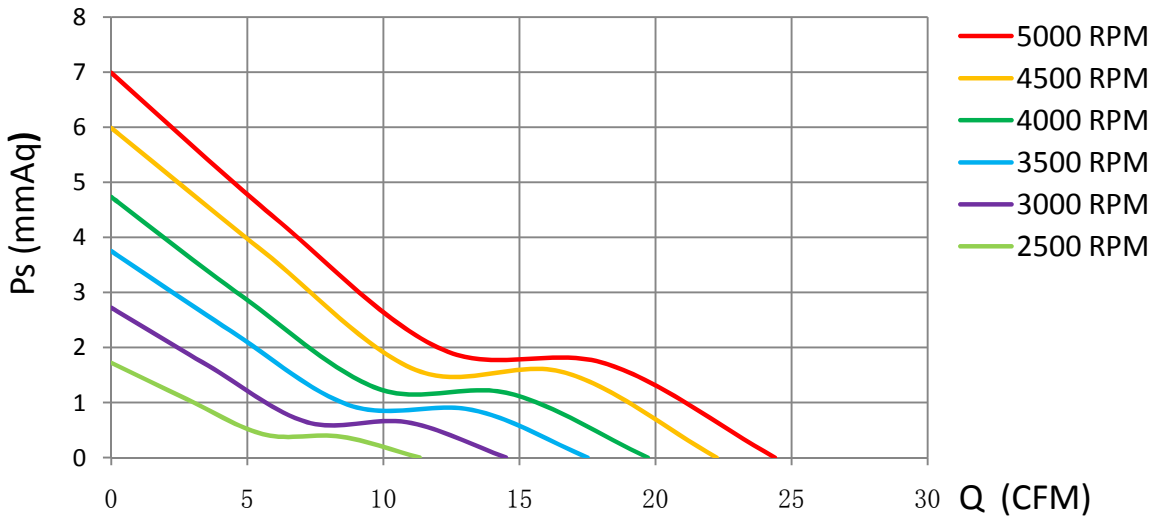

MODEL	Rated Voltage (V)	Operating Voltage Range (V)	Rated Current (Amp)	Rated Input Power (W)	Rated Speed (rpm)	Air Flow		Static Pressure		Sound level dB(A)
						(CFM)	m^3/min	(mmH2O)	inch-H2O	
CD6020L05X	5	4~5.6	0.10	0.50	2500	11.33	0.317	1.72	0.069	15.5
CD6020M05X		4~5.6	0.15	0.75	3000	14.50	0.406	2.72	0.109	19.2
CD6020H05X		4~5.6	0.20	1.00	3500	17.50	0.490	3.75	0.151	24.3
CD6020E12X	12	7~13.8	0.11	1.32	3000	14.50	0.406	2.72	0.109	19.2
CD6020L12X		7~13.8	0.17	2.04	4000	19.72	0.552	4.73	0.190	28.9
CD6020M12X		7~13.8	0.21	2.52	4500	22.25	0.623	5.99	0.241	32.7
CD6020H12X		7~13.8	0.26	3.12	5000	24.39	0.683	6.99	0.275	37.5
CD6020L24X	24	12~25.6	0.07	1.68	3000	14.50	0.406	2.72	0.109	19.2
CD6020M24X		12~25.6	0.09	2.16	4000	19.72	0.552	4.73	0.190	28.9
CD6020H24X		12~25.6	0.12	2.88	4500	22.25	0.623	5.99	0.241	32.7
CD6020X24X		12~25.6	0.16	3.84	5000	24.39	0.683	6.99	0.275	37.5

Specifications are subject to change without notice

NIKCOOL
DONGGUAN YIJIN ELECTRONIC CO.,LTD