DC 60x60x15mm - B

General Specifications

Material:.....Frame:Plastic(UL94V0)
Impeller: .....Impeller:Plastic(UL94V0)
Expected Life: .....FDB Bearing 60,000hrs (40℃)
Ball Bearing 50,000hrs (40℃)
Long Life Bearing 25,000hrs (40℃)
Lead Wire: .....+red -black or yellow Signal,blue Speed control
Temperature Range: .....Operating temperature -10℃～70℃(Humiditumidity 35%~85%RH)
Storagetemperature -30℃～70℃(Humiditumidity 35%~85%RH)
Signal output: .....FG Signal /RD Signal
Speed control mode: .....PWM Control

Dimensions

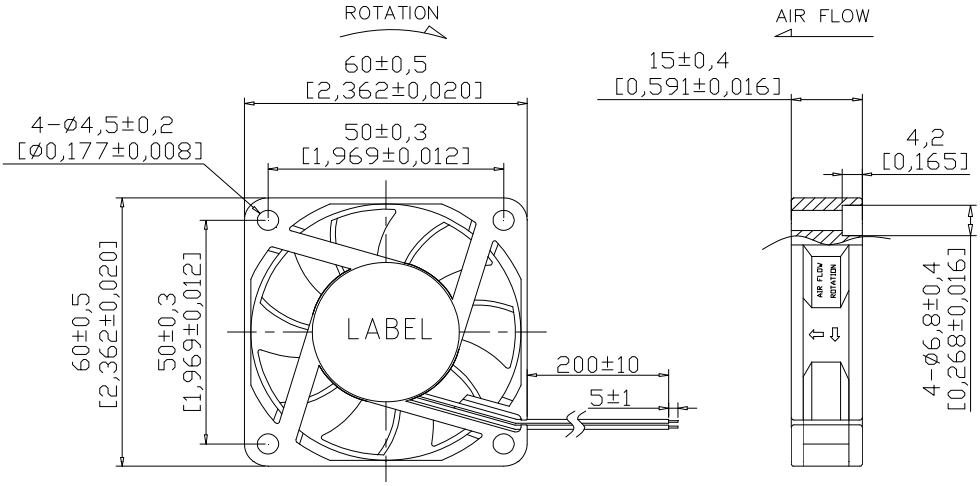

Air Flow - Static Pressure Characteristics

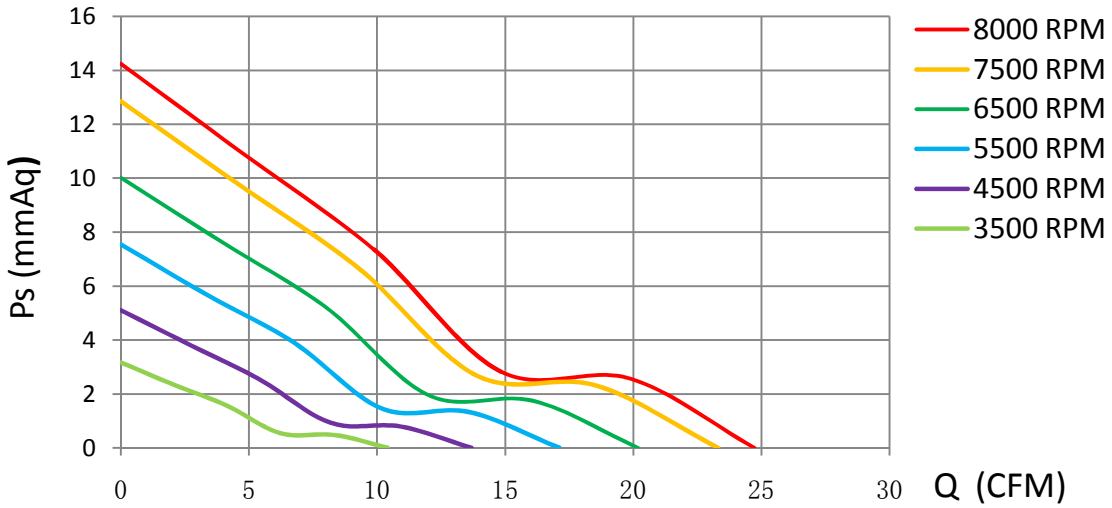

MODEL	Rated Voltage (V)	Operating Voltage Range (V)	Rated Current (Amp)	Rated Input Power (W)	Rated Speed (rpm)	Air Flow		Static Pressure		Sound level dB(A)
						(CFM)	m^3/min	(mmH2O)	inch-H2O	
CD6015L05X	5	4~5.5	0.10	0.50	3500	10.42	0.292	3.17	0.128	28.2
CD6015M05X		4~5.5	0.20	1.00	4500	13.68	0.590	5.10	0.206	35.7
CD6015H05X		4~5.5	0.30	1.50	5500	17.12	0.479	7.55	0.306	40.4
CD6015L12X	12	7~13.8	0.20	2.40	5500	17.12	0.479	7.55	0.306	40.4
CD6015M12X		7~13.8	0.30	3.60	6500	20.19	0.565	10.01	0.405	45.0
CD6015H12X		7~13.8	0.40	4.80	7500	23.31	0.653	12.85	0.520	48.7
CD6015L24X	24	12~25.6	0.10	2.40	6500	20.19	0.565	10.01	0.405	45.0
CD6015M24X		12~25.6	0.17	4.08	7500	23.31	0.653	12.85	0.520	48.7
CD6015H24X		12~25.6	0.24	5.76	8000	24.73	0.692	14.24	0.576	50.9

Specifications are subject to change without notice

NIKCOOL

DONGGUAN YIJIN ELECTRONIC CO.,LTD