DC 60x60x15mm - A

General Specifications

Material:……Frame:Plastic(UL94V0)
Impeller: ……Impeller:Plastic(UL94V0)
Expected Life: ……FDB Bearing 60,000hrs (40℃)
Ball Bearing 50,000hrs (40℃)
Long Life Bearing 25,000hrs (40℃)
Lead Wire: ……+red -black or yellow Signal,blue Speed control
Temperature Range: ……Operating temperature -10℃～70℃(Humiditumidity 35%~85%RH)
Storagetemperature -30℃～70℃(Humiditumidity 35%~85%RH)
Signal output: ……FG Signal /RD Signal
Speed control mode: ……PWM Control

Dimensions

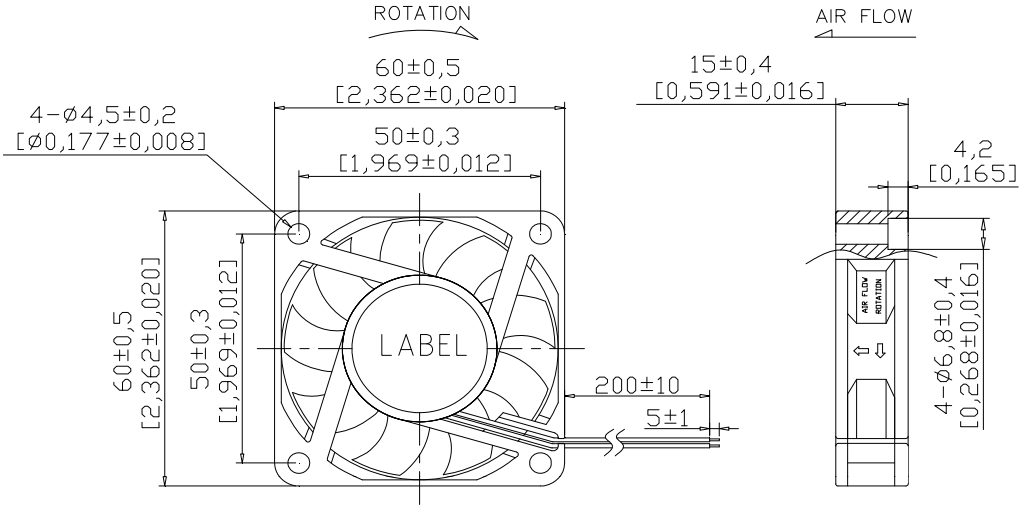

Air Flow - Static Pressure Characteristics

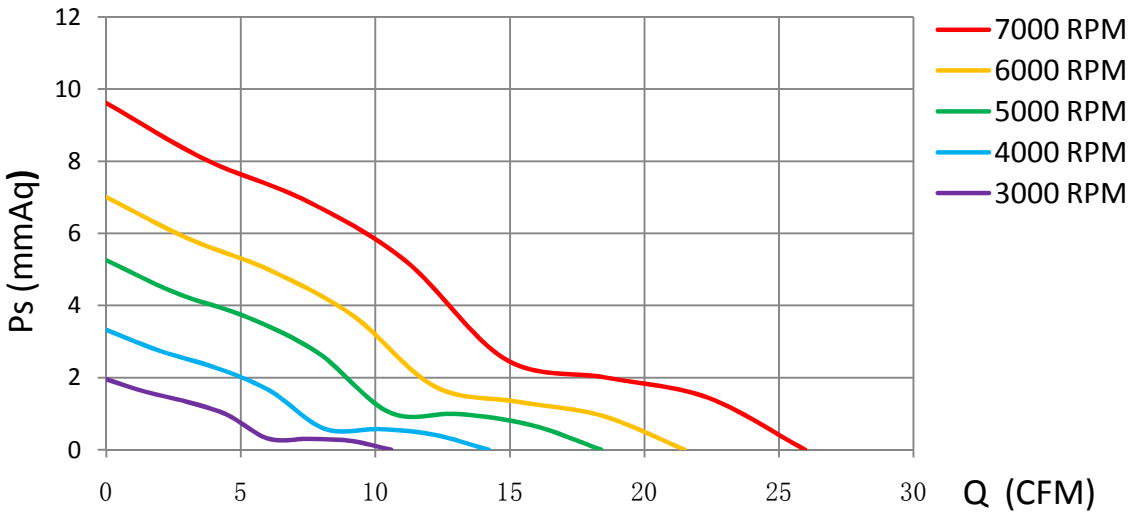

MODEL	Rated Voltage (V)	Operating Voltage Range (V)	Rated Current (Amp)	Rated Input Power (W)	Rated Speed (rpm)	Air Flow (CFM)	Air Flow m^3/min	Static Pressure (mmH2O)	Static Pressure inch-H2O	Sound level dB(A)
CD6015L05X	5	4~5.5	0.10	0.50	3000	10.59	0.297	1.95	0.078	25.0
CD6015M05X		4~5.5	0.20	1.00	4000	14.21	0.398	3.32	0.133	33.1
CD6015H05X		4~5.5	0.30	1.50	5000	18.40	0.515	5.25	0.211	39.8
CD6015L12X	12	7~13.8	0.20	2.40	5000	18.40	0.515	5.25	0.211	39.8
CD6015M12X		7~13.8	0.30	3.60	6000	21.50	0.602	7.00	0.282	43.9
CD6015H12X		7~13.8	0.40	4.80	7000	25.97	0.727	9.61	0.387	48.8
CD6015L24X	24	12~25.6	0.10	2.40	5000	18.40	0.515	5.25	0.211	39.8
CD6015M24X		12~25.6	0.17	4.08	6000	21.50	0.602	7.00	0.282	43.9
CD6015H24X		12~25.6	0.24	5.76	7000	25.97	0.727	9.61	0.387	48.8

Specifications are subject to change without notice

NIKCOOL

DONGGUAN YIJIN ELECTRONIC CO.,LTD