DC 60x60x10mm - A

General Specifications

Material:……..Frame:Plastic(UL94V0)
Impeller: ……Impeller:Plastic(UL94V0)
Expected Life: ……..FDB Bearing 60,000hrs (40℃)
Ball Bearing 50,000hrs (40℃)
Long Life Bearing 25,000hrs (40℃)
Lead Wire: ……+red -black or yellow Signal,blue Speed control
Temperature Range: ……..Operating temperature -10℃～70℃(Humiditumidity 35%~85%RH)
Storagetemperature -30℃～70℃(Humiditumidity 35%~85%RH)
Signal output: ……FG Signal /RD Signal
Speed control mode: ……..PWM Control

Dimensions

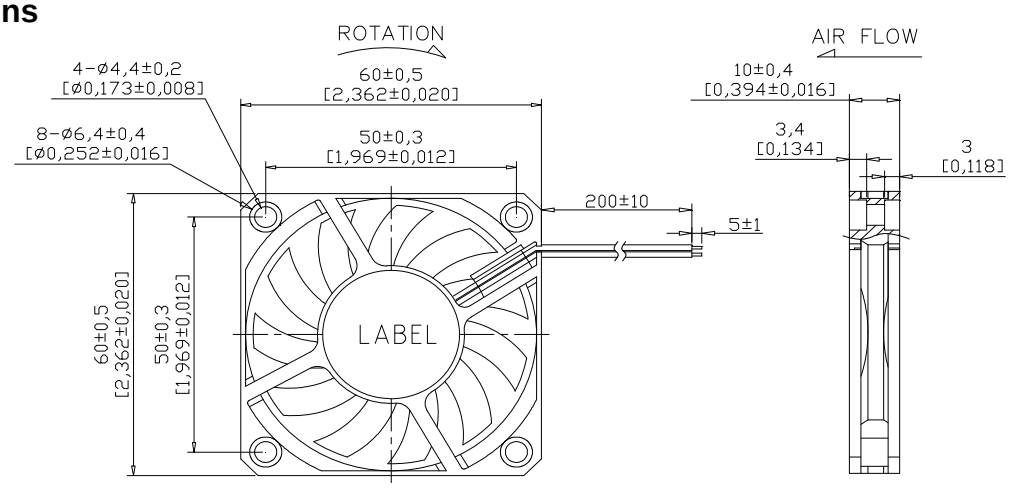

Air Flow - Static Pressure Characteristics

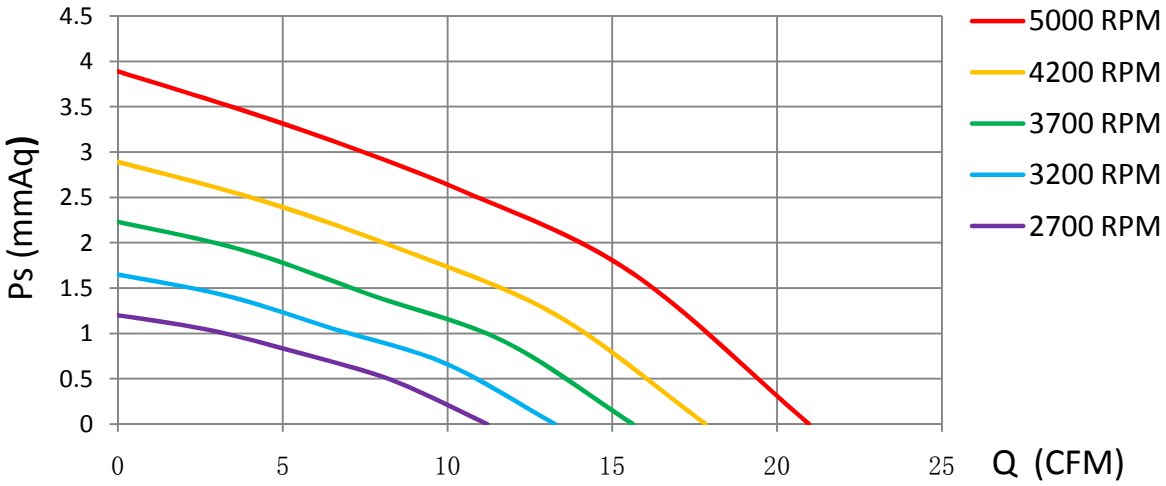

MODEL	Rated Voltage (V)	Operating Voltage Range (V)	Rated Current (Amp)	Rated Input Power (W)	Rated Speed (rpm)	Air Flow		Static Pressure		Sound level dB(A)
						(CFM)	m^3/min	(mmH2O)	inch-H2O	
CD6010L05X	5	4~5.5	0.16	0.80	2700	11.20	0.314	1.20	0.048	22.70
CD6010M05X		4~5.5	0.25	1.25	3200	13.26	0.371	1.65	0.067	27.50
CD6010H05X		4~5.5	0.35	1.75	3700	15.62	0.437	2.23	0.089	31.70
CD6010L12X	12	7~13.8	0.08	0.96	3200	13.26	0.371	1.65	0.067	27.50
CD6010M12X		7~13.8	0.13	1.56	3700	15.62	0.437	2.23	0.089	31.70
CD6010H12X		7~13.8	0.17	2.04	4200	17.83	0.499	2.89	0.116	34.10
CD6010X12X		7~13.8	0.24	2.88	5000	20.96	0.587	3.89	0.156	39.00
CD6010E24X	24	12~25.6	0.08	1.92	3200	13.26	0.371	1.65	0.067	27.50
CD6010L24X		12~25.6	0.11	2.64	3700	15.62	0.437	2.23	0.089	31.70
CD6010M24X		12~25.6	0.13	3.12	4200	17.83	0.499	2.89	0.116	34.10
CD6010H24X		12~25.6	0.20	4.80	5000	20.96	0.587	3.89	0.156	39.00

Specifications are subject to change without notice

NIKCOOL

DONGGUAN YIJIN ELECTRONIC CO.,LTD