DC 50x50x20mm - A

General Specifications

Material:……Frame:Plastic(UL94V0)
Impeller: ……..Impeller:Plastic(UL94V0)
Expected Life: ……FDB Bearing 60,000hrs (40℃)
Ball Bearing 50,000hrs (40℃)
Long Life Bearing 25,000hrs (40℃)
Lead Wire: ……..+red -black or yellow Signal,blue Speed control
Temperature Range: ……..Operating temperature -10℃～70℃(Humiditumidity 35%~85%RH)
Storagetemperature -30℃～70℃(Humiditumidity 35%~85%RH)
Signal output: ……..FG Signal /RD Signal
Speed control mode: ……....PWM Control

Dimensions

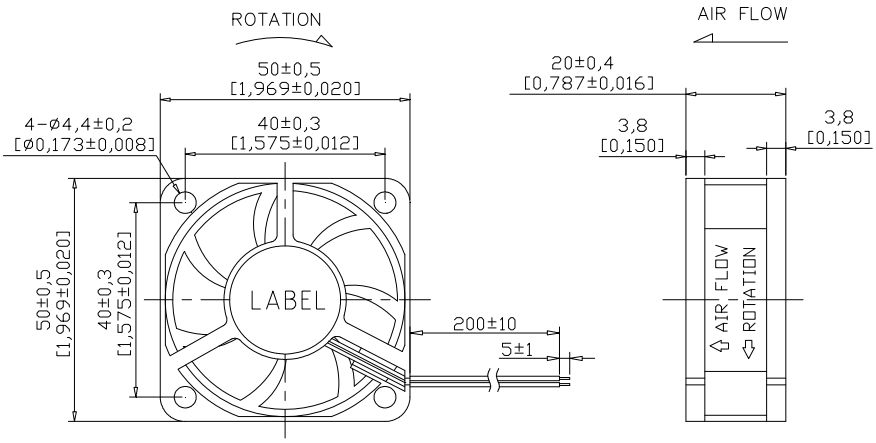

Air Flow - Static Pressure Characteristics

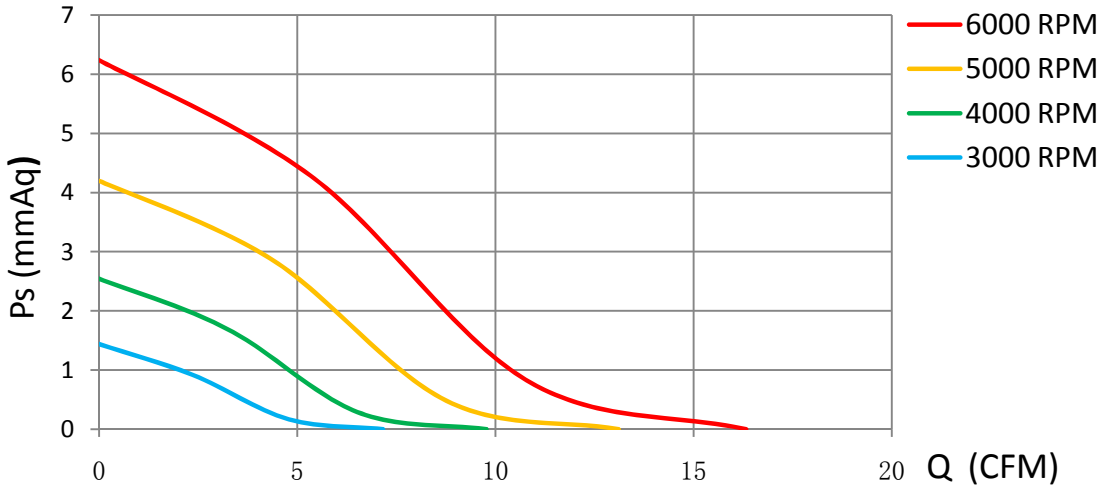

MODEL	Rated Voltage (V)	Operating Voltage Range (V)	Rated Current (Amp)	Rated Input Power (W)	Rated Speed (rpm)	Air Flow		Static Pressure		Sound level dB(A)
						(CFM)	m^3/min	(mmH2O)	inch-H2O	
CD5020L05X	5	4~5.5	0.11	0.55	3000	7.17	0.201	1.44	0.058	18.0
CD5020M05X		4~5.5	0.19	0.95	4000	9.78	0.274	2.54	0.102	25.4
CD5020H05X		4~5.5	0.26	1.3	5000	13.11	0.367	4.20	0.168	31.4
CD5020L12X	12	7~13.8	0.08	0.96	3000	7.17	0.201	1.44	0.058	18.0
CD5020M12X		7~13.8	0.10	1.2	4000	9.78	0.274	2.54	0.102	25.4
CD5020H12X		7~13.8	0.15	1.8	5000	13.11	0.367	4.20	0.168	31.4
CD5020X12X		7~13.8	0.19	2.28	6000	16.33	0.457	6.24	0.250	37.9
CD5020L24X	24	12~25.6	0.06	1.44	3000	7.17	0.201	1.44	0.058	18.0
CD5020M24X		12~25.6	0.08	1.92	4000	9.78	0.274	2.54	0.102	25.4
CD5020H24X		12~25.6	0.11	2.64	5000	13.11	0.367	4.20	0.168	31.4
CD5020X24X		12~25.6	0.14	3.36	6000	16.33	0.457	6.24	0.250	37.9

Specifications are subject to change without notice

NIKCOOL

DONGGUAN YIJIN ELECTRONIC CO.,LTD