DC 50x50x15mm - A

General Specifications

Material:……..Frame:Plastic(UL94V0)
Impeller: ……Impeller:Plastic(UL94V0)
Expected Life: ……FDB Bearing 60,000hrs (40℃)
Ball Bearing 50,000hrs (40℃)
Long Life Bearing 25,000hrs (40℃)
Lead Wire: ……+red -black or yellow Signal,blue Speed control
Temperature Range: ……..Operating temperature -10℃～70℃(Humiditumidity 35%~85%RH)
Storagetemperature -30℃～70℃(Humiditumidity 35%~85%RH)
Signal output: ……FG Signal /RD Signal
Speed control mode: ……..PWM Control

Dimensions

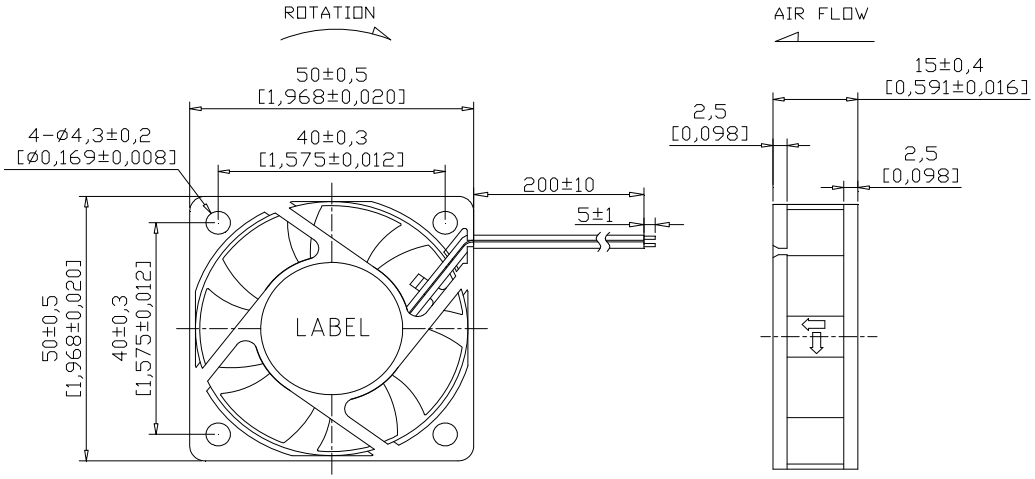

Air Flow - Static Pressure Characteristics

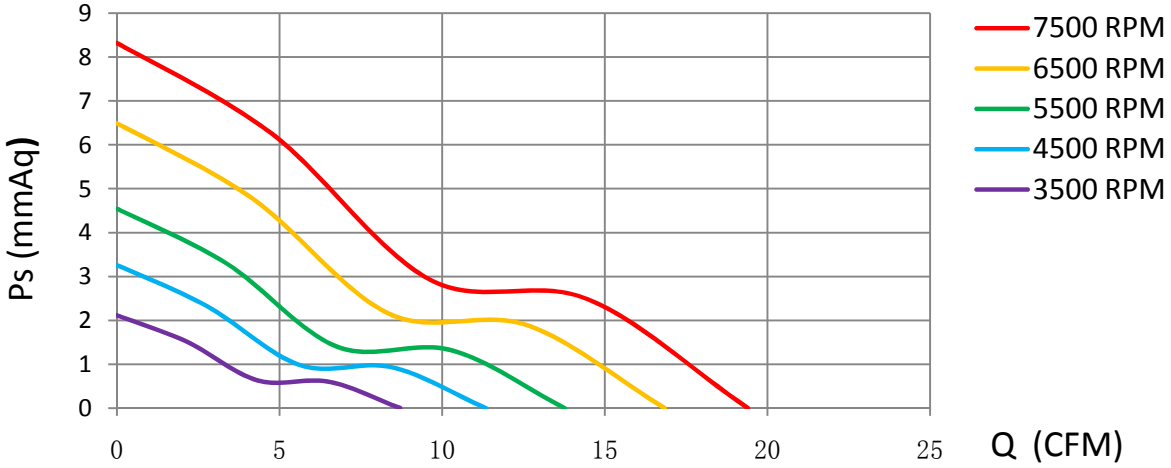

MODEL	Rated Voltage (V)	Operating Voltage Range (V)	Rated Current (Amp)	Rated Input Power (W)	Rated Speed (rpm)	Air Flow		Static Pressure		Sound level dB(A)
						(CFM)	m^3/min	(mmH2O)	inch-H2O	
CD5015L05X	5	4~5.5	0.14	0.7	3500	8.71	0.244	2.11	0.085	19.20
CD5015M05X		4~5.5	0.18	0.9	4500	11.35	0.318	3.26	0.131	25.10
CD5015H05X		4~5.5	0.21	1.05	5500	13.77	0.386	4.54	0.183	32.00
CD5015L12X	12	7~13.8	0.08	0.96	4500	11.35	0.318	3.26	0.131	25.10
CD5015M12X		7~13.8	0.12	1.44	5500	13.77	0.386	4.54	0.183	32.00
CD5015H12X		7~13.8	0.18	2.16	6500	16.84	0.472	6.49	0.261	35.70
CD5015X12X		7~13.8	0.22	2.64	7500	19.40	0.543	8.32	0.334	38.60
CD5015L24X	24	12~25.6	0.04	0.96	5500	13.77	0.386	4.54	0.183	32.00
CD5015M24X		12~25.6	0.08	1.92	6500	16.84	0.472	6.49	0.261	35.70
CD5015H24X		12~25.6	0.13	3.12	7500	19.40	0.543	8.32	0.334	38.60

Specifications are subject to change without notice

NIKCOOL

DONGGUAN YIJIN ELECTRONIC CO.,LTD