DC 45x45x20mm - A

General Specifications

Material:……Frame:Plastic(UL94V0)
Impeller: ……Impeller:Plastic(UL94V0)
Expected Life: ……FDB Bearing 60,000hrs (40℃)
Ball Bearing 50,000hrs (40℃)
Long Life Bearing 25,000hrs (40℃)
Lead Wire: ……+red -black or yellow Signal,blue Speed control
Temperature Range: ……Operating temperature -10℃～70℃(Humiditumidity 35%~85%RH)
Storagetemperature -30℃～70℃(Humiditumidity 35%~85%RH)
Signal output: ……FG Signal /RD Signal
Speed control mode: ……PWM Control

Dimensions

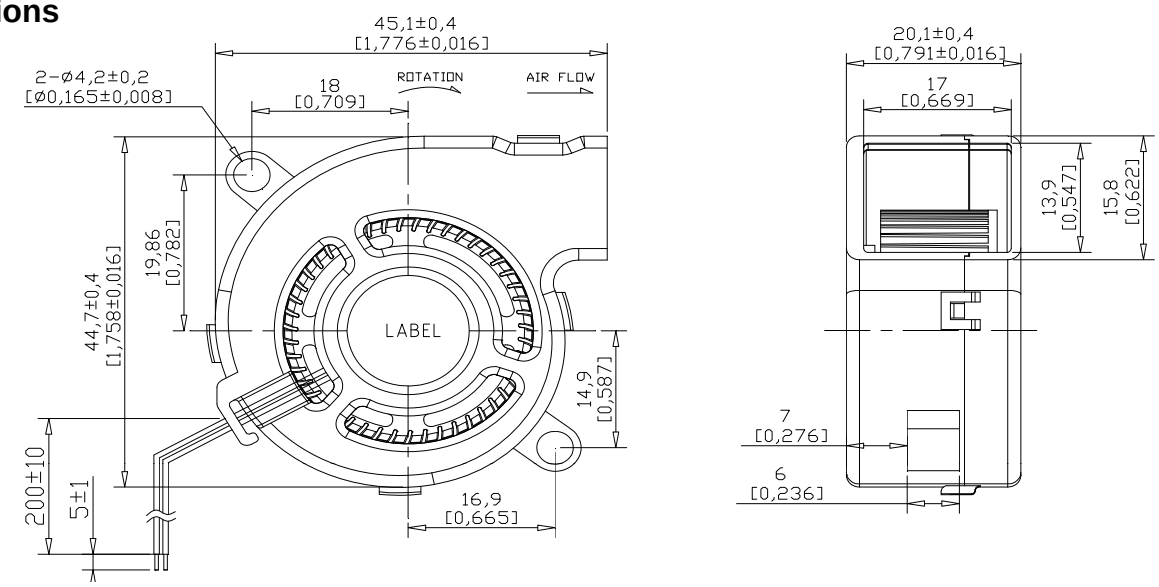

Air Flow - Static Pressure Characteristics

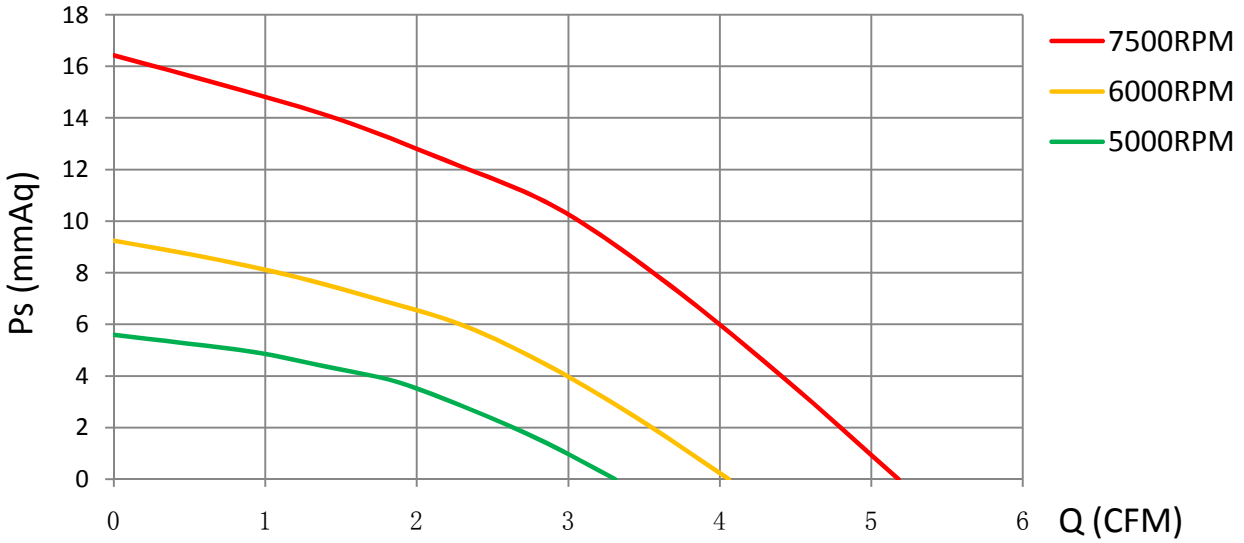

MODEL	Rated Voltage (V)	Operating Voltage Range (V)	Rated Current (Amp)	Rated Input Power (W)	Rated Speed (rpm)	Air Flow		Static Pressure		Sound level
						(CFM)	m^3/min	(mmH2O)	inch-H2O	dB(A)
CB4520L12X	12	7~13.8	0.06	0.72	5000	3.31	0.093	5.59	0.233	22.9
CB4520M12X		7~13.8	0.10	1.20	6000	4.06	0.114	9.24	0.387	28.4
CB4520H12X		7~13.8	0.17	2.04	7500	5.18	0.145	16.43	0.688	35.4
CB4520L24X	24	12~25.6	0.06	1.44	5000	3.31	0.093	5.59	0.233	22.9
CB4520M24X		12~25.6	0.08	1.92	6000	4.06	0.114	9.24	0.387	28.4
CB4520H24X		12~25.6	0.11	2.64	7500	5.18	0.145	16.43	0.688	35.4

Specifications are subject to change without notice

NIKCOOL

DONGGUAN YIJIN ELECTRONIC CO.,LTD