DC 50x50x25mm - A

General Specifications

Material:……Frame:Plastic(UL94V0)
Impeller: ……..Impeller:Plastic(UL94V0)
Expected Life: ……FDB Bearing 60,000hrs (40℃)
Ball Bearing 50,000hrs (40℃)
Long Life Bearing 25,000hrs (40℃)
Lead Wire: ……..+red -black or yellow Signal,blue Speed control
Temperature Range: ……..Operating temperature -10℃～70℃(Humiditumidity 35%~85%RH)
Storagetemperature -30℃～70℃(Humiditumidity 35%~85%RH)
Signal output: ……..FG Signal /RD Signal
Speed control mode: ……PWM Control

Dimensions

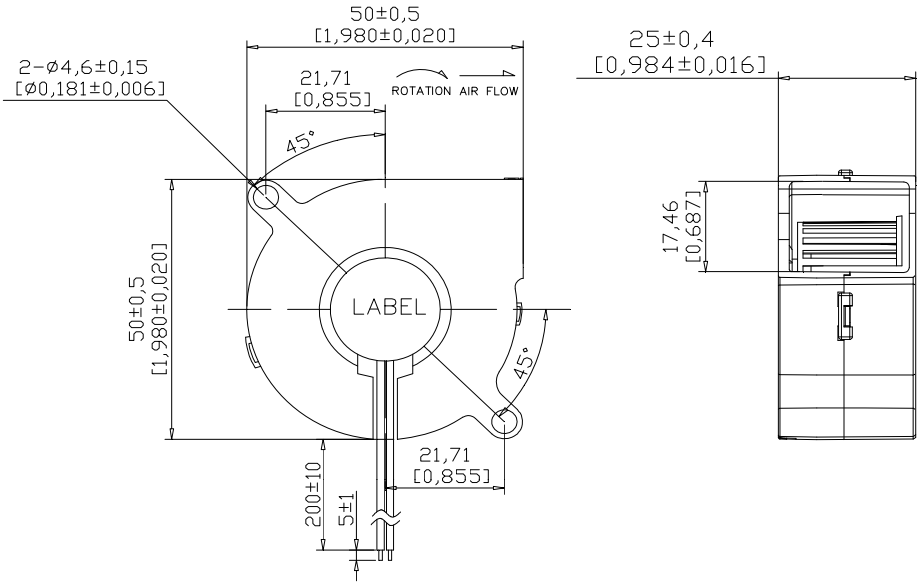

Air Flow - Static Pressure Characteristics

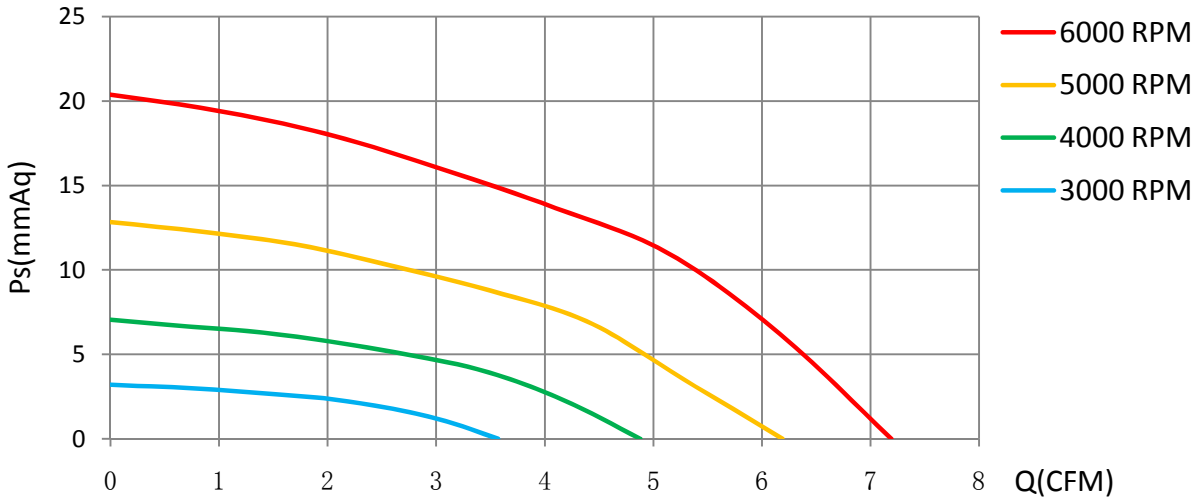

MODEL	Rated Voltage (V)	Operating Voltage Range (V)	Rated Current (Amp)	Rated Input Power (W)	Rated Speed (rpm)	Air Flow		Static Pressure		Sound level dB(A)
						(CFM)	m^3/min	(mmH2O)	inch-H2O	
CB5025L12X	12	7~13.8	0.10	1.20	3000	3.57	0.100	3.20	0.134	23.5
CB5025M12X		7~13.8	0.14	1.68	4000	4.88	0.137	7.05	0.295	31.9
CB5025H12X		7~13.8	0.20	2.40	5000	6.19	0.173	12.83	0.539	38.9
CB5025L24X	24	12~25.6	0.11	2.64	4000	4.88	0.137	7.05	0.295	31.9
CB5025M24X		12~25.6	0.17	4.08	5000	6.19	0.173	12.83	0.539	38.9
CB5025H24X		12~25.6	0.24	5.76	6000	7.19	0.201	20.37	0.857	44.3

Specifications are subject to change without notice

NIKCOOL

DONGGUAN YIJIN ELECTRONIC CO.,LTD