DC 45x45x10mm - A

General Specifications

Material:……Frame:Plastic(UL94V0)
Impeller: ……..Impeller:Plastic(UL94V0)
Expected Life: ……FDB Bearing 60,000hrs (40℃)
Ball Bearing 50,000hrs (40℃)
Long Life Bearing 25,000hrs (40℃)
Lead Wire: ……..+red -black or yellow Signal,blue Speed control
Temperature Range: ……Operating temperature -10℃～70℃(Humiditumidity 35%~85%RH)
Storagetemperature -30℃～70℃(Humiditumidity 35%~85%RH)
Signal output: ……..FG Signal /RD Signal
Speed control mode: ……PWM Control

Dimensions

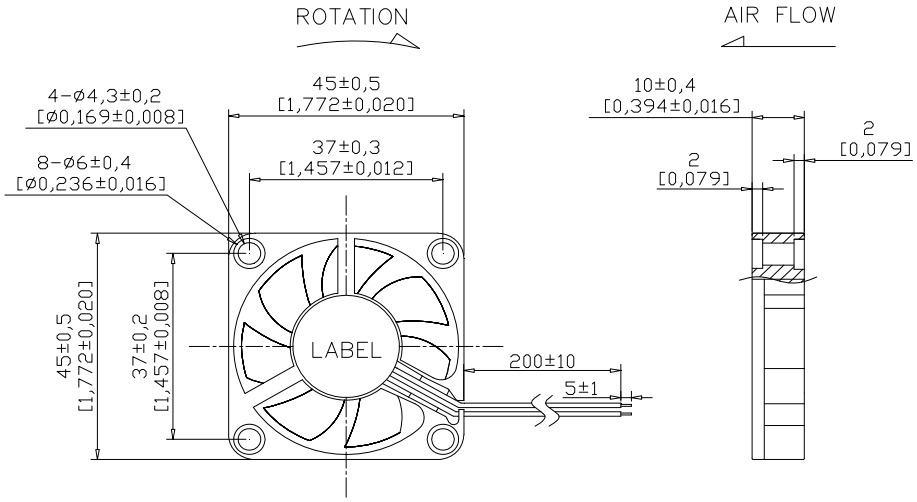

Air Flow - Static Pressure Characteristics

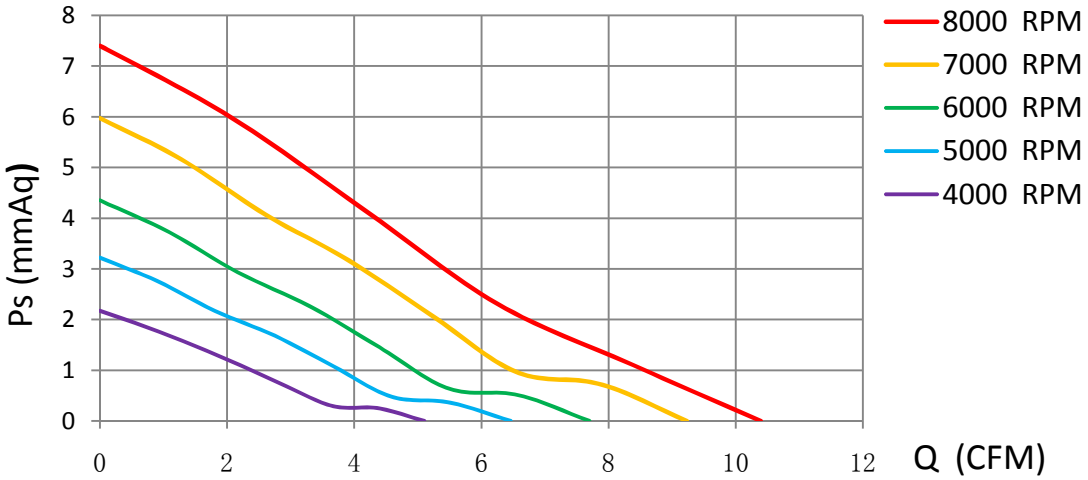

MODEL	Rated Voltage (V)	Operating Voltage Range (V)	Rated Current (Amp)	Rated Input Power (W)	Rated Speed (rpm)	Air Flow		Static Pressure		Sound level dB(A)
						(CFM)	m^3/min	(mmH2O)	inch-H2O	
CD4510L05X	5	4~5.5	0.10	0.50	4000	5.10	0.143	2.17	0.087	23.3
CD4510M05X		4~5.5	0.20	1.00	5000	6.46	0.181	3.22	0.130	28.9
CD4510H05X		4~5.5	0.30	1.50	6000	7.70	0.216	4.35	0.176	37.9
CD4510L12X	12	7~13.8	0.15	1.80	5000	6.46	0.181	3.22	0.130	35.1
CD4510M12X		7~13.8	0.25	3.00	6000	7.70	0.216	4.35	0.176	37.9
CD4510H12X		7~13.8	0.35	4.20	7000	9.23	0.258	5.97	0.241	42.2
CD4510L24X	24	12~25.6	0.08	1.92	6000	7.70	0.216	4.35	0.176	35.1
CD4510M24X		12~25.6	0.10	2.40	7000	9.23	0.258	5.97	0.241	37.9
CD4510H24X		12~25.6	0.12	2.88	8000	10.39	0.291	7.40	0.299	42.2

Specifications are subject to change without notice

NIKCOOL

DONGGUAN YIJIN ELECTRONIC CO.,LTD